HCW707HTSXUK

12NC: F168036

GTIN (EAN) code: 5054645680368

Hotpoint

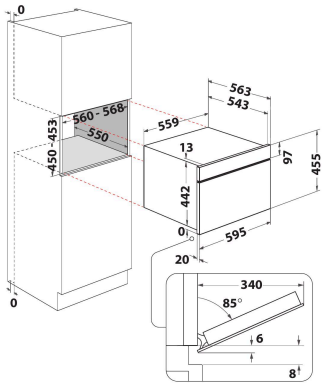

MAIN FEATURES

Product group	Microwave
Commercial code	HCW707HTSXUK
Main colour of product	Inox
Type of micro-wave oven	MW-Combi
Construction type	Built-in
Type of control	Electronic
Type of control settings	Touch-control
Additional cooking method Grill	Yes
Crisp	Yes
Steam	Yes
Additional cooking method Fan cooking	Yes
Clock	Yes
Automatic programmes	Yes
Height of the product	455
Width of the product	559
Depth of the product	543
Minimum niche height	450
Minimum niche width	560
Niche depth	550
Net weight (kg)	41
Cavity capacity (l)	53
Turntable	No
Turntable diameter (mm)	0
Integrated Cleaning system	Hydrolytic

TECHNICAL FEATURES

Current (A)	16
Voltage (V)	220-240
Frequency (Hz)	50
Length of electrical supply cord (cm)	150
Plug type	UK
Timer	No
Grill power (W)	2000
Type of grill	Heating element
-	Enamelled
Interior light	Yes
Additional cooking method Grill	Yes
Position of interior lights of the cavity	Right side

PERFORMANCES

6th Sense / Dynamic Intelligence	MyMenu
Number of power levels	7
Maximum micro-wave power (W)	950
Bread defrost	Yes
Jet defrost	Yes
Jet start	Yes