THANK YOU FOR BUYING AN INDESIT PRODUCT.
In order to receive a more complete assistance, please register your product on **www.indesit.eu/register**

Before using the appliance carefully read the Safety Instruction.

CONTROL PANEL

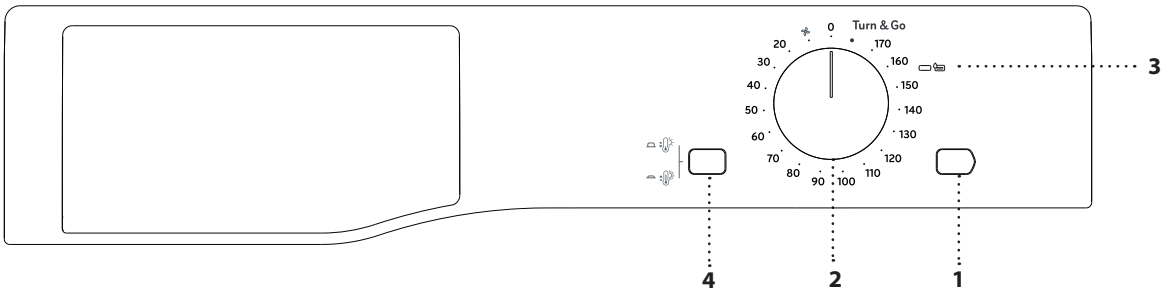

FIRST TIME USE

Remove all the tapes used to hold items on the machine.
Before you use it, clean the inside of the drum to remove any dust that could have accumulated during transport. Slight odour or vapour may be found if you open the door during its first use, this is normal and should only last a few minutes.
Make sure that the water tank is correctly inserted. Make sure that the drain hose on the back of the dryer is properly connected, either to the dryer's water tank or to your domestic drainage system.
The dryer must be installed in a room with a temperature ranging between 5°C and 35°C to ensure proper operation.

DESCRIPTION OF CONTROL PANEL

1. "Start" button.

Press to begin drying.

2. "Drying Time" selection knob.

This is used to set the drying time: turn the knob in a clockwise direction until the indicator is set to the desired drying time. The 0 position switches off the dryer.

3. "Emptying Water Tank" indicator light.

To indicate when the water tank needs emptying.

Lighting up when the container is full, the door is closed and the "Start" button has been pressed.

After emptying, reposition it correctly and the light will take around 30 seconds to switch off after restarting the drying cycle with the "Start" button.

IMPORTANT: If the container becomes full during the cycle, the dryer will automatically stop and clothes will not be dried. To avoid this empty the tank after or before starting a cycle.

4. "High Heat" button.

To be used to increase the heat on drying cycles.

DAILY USE

Doing this will keep your machine working at its BEST:
- remember to empty your water tank after each drying cycle.
- remember to clean your condenser unit regularly (monthly).
- remember to clean your filter after each drying cycle.
Refer to the Care & Maintenance section.

1. Plug the dryer into the power supply socket.
2. Open the door and load garments; always refer to instructions on clothing labels and the max loads indicated in the drying time table. Empty pockets. Make sure garments do not get caught between the door and/or the door filter.
3. Close the door.
4. Turn the "Drying Time" selection knob until the indicator is pointing towards the most suitable drying time for the type of fabric in that load.

Note: do not attempt to turn the knob anticlockwise.

5. If necessary, set the temperature using the "High Heat" button.
6. Press the "Start" button to begin drying.
7. A final COOL TUMBLE phase (i.e. the fabrics are cooled) activates during the last few minutes of the drying cycle; always allow this phase to finish.
8. The cycle ends when the selection knob reaches the "0" zero position and the drum stops.
9. Open the door, remove the laundry.
10. Disconnect the dryer from the power supply.
11. Clean the filter and replace it.
12. Empty the water tank and put it back in its slot.

OPENING THE DOOR DURING THE CYCLE

Laundry can be checked while the drying cycle runs and any garments already dry can be removed, while drying continues for the remaining items. After closing the door, press the "Start" button to resume machine operation.

CARE LABEL

Always check the care labels, especially when placing garments in the tumble dryer for the first time. Below are the most commonly used symbols:

May be tumble dried.

Do not tumble dry.

Tumble dry – high heat.

Tumble dry – low heat.

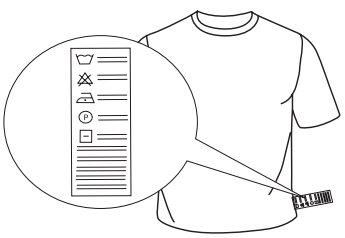

DRYING TIMES AND OPTIONS

Refresh
A short cycle suitable for refreshing fibres and garments through the emission of fresh air. It lasts about 10 minutes.
As this is not a drying cycle, it is not to be used for garments that are still wet.
It can be used on any load size but is more effective on smaller loads.

High Heat

This button selects the drying temperature. When the button is out low heat is selected and when it is pushed in high heat is selected.

Drying Times

The drying time depends on the size of the load and on the type of fabric it contains (see the table below).

A cool tumble cycle runs during the final 10 minutes of the cycle.

High Heat Cotton is the most efficient setting in terms of energy consumption (EU 392/2012). To reach maximum efficiency, select the highest temperature option.

"Turn and Go" cotton full load 180 min.

A cycle suitable for a full cotton load. It sets up the right timing in just one turn of a dial.

Drying times are approximate and may vary depending on the following:

- *Amount of water retained after the spin cycle:* towels and delicate items can retain a lot of water (if laundry retains a large amount of water, use a longer cycle than the one recommended).
- *Fabrics:* items of the same fabric, but with different texture and thickness may have different drying times.
- *Amount of laundry:* single items and small loads take less time to dry.
- *Ironing:* If you will be ironing laundry, remove while slightly damp for better results. Items not being ironed can be left longer.
- *Temperature of the room:* the lower the temperature of the room, the longer it will take for the dryer to dry clothing.
- *Bulky items:* Bulky items require special care. We recommend removing several times the items during the drying cycle to shake them out.

Warning: do not over-dry items.

All fabrics contain natural dampness which helps to keep them soft and fluffy.

Drying Times table

Fabric	Load							
	1 kg	2 kg	3 kg	4 kg	5 kg	6 kg	7 kg	8 kg
Cotton – high heat	30 or 40 minutes	40 or 55 minutes	55 or 70 minutes	70 or 80 minutes	80 or 90 minutes	95 or 120 minutes	120 or 140 minutes	140 or 150 minutes
Synthetics – low heat	40 or 50 minutes	50 or 70 minutes	70 or 90 minutes	-	-	-	-	-
Delicates – low heat	40 or 60 minutes	55 or 75 minutes	-	-	-	-	-	-

Refer to the rating label located on the rear of the dryer for maximum load capacity.

Maximum load sizes: 7 kg

Power consumption			
off-mode (Po) - Watts			0.06
left-on mode (Pl) - Watts			0.06
Drying Cycles	**kg**	**kWh**	**Minutes**
High Heat Cotton*	7	4.25	129
High Heat Cotton	3.5	2.31	72
Low Heat Synthetics	3	1.32	75

*This is the reference setting used for the energy label and is suitable for drying normal wet cotton laundry.

Maximum load sizes: 8 kg

Power consumption			
off-mode (Po) - Watts			0.06
left-on mode (Pl) - Watts			0.06
Drying Cycles	**kg**	**kWh**	**Minutes**
High Heat Cotton*	8	4.75	143
High Heat Cotton	4	2.57	81
Low Heat Synthetics	3	1.32	75

*This is the reference setting used for the energy label and is suitable for drying normal wet cotton laundry.

CARE AND MAINTENANCE

WARNING: unplug the dryer during the cleaning and maintenance procedures.

Emptying the water tank after each cycle (see Fig. A).

Pull the container out of the dryer and empty it into a sink or other suitable drain, then place it back properly. Do not use the dryer without having inserted the container back in place.

Cleaning the door filter after each cycle (see Fig. B).

Pull the filter out and clean it by removing the lint from the filter surface with your hand or a cloth or a vacuum cleaner, then put it back in place.

Do not use the dryer without having reinserted the filter in place.

Remove the door filter as described below:

1. Open the door and pull the filter upwards.
2. Open the filter and remove the lint from all its parts. Replace the filter correctly making sure it is fully seated.

The filter is an essential part for drying. It is intended to collect the lint formed during the drying process. If the filter is clogged, the air flow inside the dryer can become seriously affected: this will increase the drying time and energy consumption, and could damage the dryer.

Cleaning the condenser unit (see Fig. C).

Remove the condenser unit regularly (monthly) and clean off any fluff deposits from the plates by running cold water along its rear end and the two sides. Collect any lint and dispose of it in the bin rather than wash it down the drain.

Removing the condenser:

1. Open the condenser cover, unlock the three catches by turning them 90° anticlockwise.
2. Pull on the grip to remove the condenser.
3. Clean the surface of the seals.
4. Replace the unit with the arrows pointing upwards, while making sure that the catches are securely fixed.

PLEASE SCAN THE QR CODE FOR MORE INFORMATION ON HOW TO KEEP YOUR DRYER CLEAN.

Cleaning the tumble dryer

- The external metal, plastic and rubber parts can be cleaned with a damp cloth.
- Clean the front air intake grille regularly (every 6 months) with a vacuum cleaner to remove any lint, fluff or dust deposits. Furthermore, remove any lint deposits from the front part of the condenser and from the filter area, using a vacuum cleaner every so often.
- Do not use solvents or abrasives.

TRANSPORT AND HANDLING

Never lift the dryer by holding on to its top side.

1. Unplug the dryer
2. Remove the water from the water tank completely.
3. Make sure that door and water tank are properly closed.
4. If the drain hose is connected to your drainage system, re-connect it to the back of the dryer (see "Installation" section in the Safety Instructions).

PRODUCT DESCRIPTION

1. Water tank
2. Air intake
3. Door filter
4. Condenser unit
5. Condenser cover

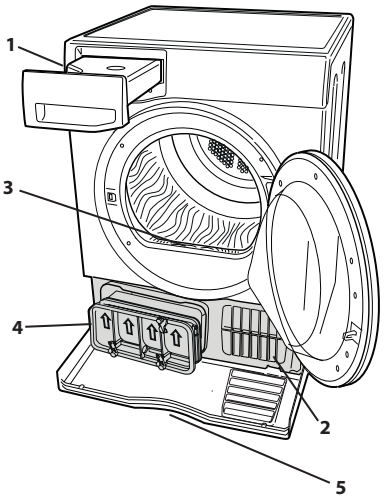

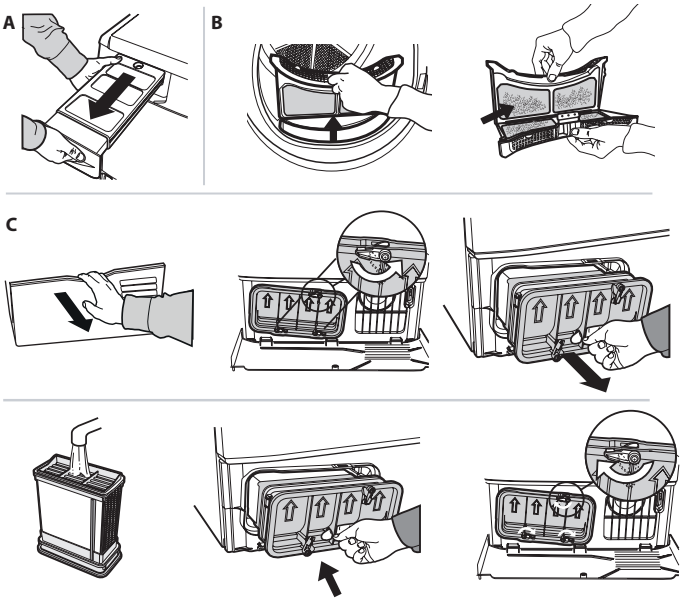

TROUBLESHOOTING

Before contacting the After-sales Service, refer to the table below. Often the malfunctions are minor and can be solved in a few minutes.

Malfunction	Possible cause	Solution
The tumble dryer does not start.	The plug is not inserted into the socket.	Insert the plug into the socket.
	The plug is faulty.	Try to plug another appliance in the same socket. Do not use connecting electrical devices to the socket, such as adapters or extensions.
	A power failure occurred.	Wait for the power supply to be restored and switch the fuse on again if necessary.
	The door has not been closed properly.	Close the door.
	The drying time has not been set correctly.	Refer to the "Drying Time and Options" section to find the most suitable drying time and options for the type of load.
	The "Start" button was not pressed to begin drying.	Press the "Start" button.
The drying times are very long.	An appropriate maintenance was not carried out.	Refer to the "Care & Maintenance" section and perform the described operations.
	An incorrect drying time or option was selected for the type of load.	Refer to the "Drying Time and Options" section to find the most suitable drying times cycle and options for the type of load.
	The garments are too wet.	Carry out a washing cycle with higher spin speed to remove as much water as possible.
	The dryer may be overloaded.	Refer to the "Drying Times" table to check the max load for each drying times cycle.
	The air intake grille is clogged up.	Clean and do not occlude the air intake grille, refer to "Care & Maintenance" section.
The “Empty Water Tank” indicator light is on.	The water tank is full.	The water tank was not emptied before starting the drying cycle. Always empty it before starting a new drying cycle - do not wait for the tank full indicator light is on before emptying the water tank.
The dryer is noisy during the first few minutes of operation.	This is normal, especially if the dryer has not been used for a long time.	If the noise persists during the entire drying cycle, contact the After-sales Service.
The timer resets to zero without the dryer running.	This is normal, during this period you may hear a ticking noise from the timer.	This ensures you select the correct drying time when you next use the dryer.
Drum - slight odour or vapour.	Slight odour or vapour may be found if you open the door during its first use.	This is normal and should only last a few minutes.

Policies, standard documentation, ordering of spare parts and additional product information can be found by:

- Visiting our website **docs.indesit.eu** and **parts-selfservice.whirlpool.com**
- Using QR Code
- Alternatively, **contact our After-sales Service** (See phone number in the warranty booklet). When contacting our After-sales Service, please state the codes provided on your product’s identification plate.



400011696066
09/2023