W7I HT58 T

12NC: 869991656940

GTIN (EAN) code: 8003437639111

Whirlpool

SENSING THE DIFFERENCE

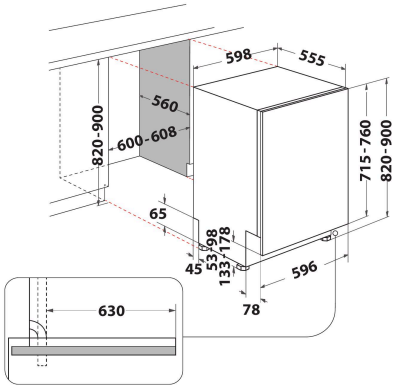

MAIN FEATURES

Construction type	Built-in
Installation type	Full-integrated
Type of control	Electronic
Type of control settings	-
Removable work top	No
Main colour of product	Черен
Electrical connection rating (W)	1900
Current (A)	10
Voltage (V)	220-240
Frequency (Hz)	50
Length of Electrical Supply Cord (cm)	130
Plug type	Schuko
Length inlet hose (cm)	155
Length outlet hose (cm)	150
Adjustable feet	Yes - front only
Height of the product	820
Width of the product	598
Depth of the product	555
Minimum niche height	820
Maximum niche height	900
Minimum niche width	600
Maximum niche width	600
Niche depth	560
Net weight (kg)	35.5
Gross weight (kg)	37.5

TECHNICAL FEATURES

Automatic programmes	Yes
Maximum temperature for water intake (°C)	60
Start delay options	Continuous
Start delay time max. (h)	24
Progress indicator	-
Digital countdown indicator	Yes
Salt light indicator	Yes
Rinse aid light indicator	Yes
Safety device	Yes
Adjustable upper basket	Yes
Largest loadable dish upper basket (cm)	0
Largest loadable dish lower basket (cm)	0
Maximum number of place settings (EU 2017/1369)	15
Column installation	No

ENERGY LABEL

Energy Efficiency Class (Regulation (EU) 2017/1369)	B
Energy Consumption for 100 cycles Eco Programme (EU 2017/1369)	65
Power consumption in standby mode (Psm) (EU 2017/1369)	0,50
Power consumption in off-mode (Po) (EU 2017/1369)	0,00
The water consumption of the eco programme in liters per cycle (EU 2017/1369)	9,5
Airborne acoustical noise emissions (EU 2017/1369)	38
Airborne acoustical noise emission class (EU 2017/1369)	A
Programme duration in HMM (EU 2017/1369)	4:00