THANK YOU FOR BUYING A WHIRLPOOL PRODUCT.
In order to receive a more complete assistance, please register your appliance on **www.whirlpool.eu/register**

Before using the appliance carefully read the Safety Instruction.
Before using the machine, it is imperative that the transport bolts are removed. For more detailed instructions on how to remove them, see the Installation Guide.

CONTROL PANEL

1 "ON/OFF" button
2 Programme selector
3 "Start/Pause" button
4 "Spin" button
5 "Intensive rinse" button
6 "Clean+" button
7 "Start delay" button
8 "FreshCare+" / "Key lock" button
9 "Temperature" button

DISPLAY INDICATORS
Pre-wash activated
Door locked

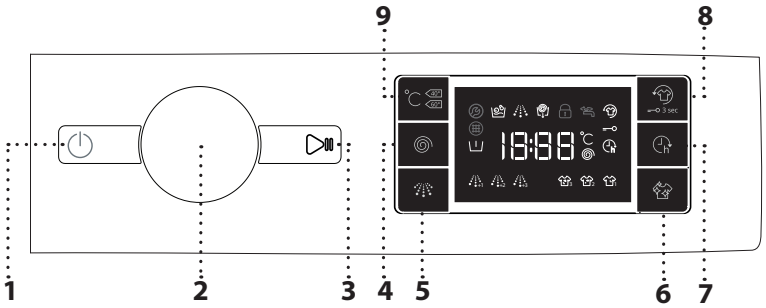

FreshCare+ activated
Start delay activated
Key lock activated
Washing phase
Indicates washing phase of the cycle
Failure: Call Service
Refer to Troubleshooting section
Failure: Water filter clogged
Water cannot be drained; water filter might be blocked
Failure: No water
No or not sufficient inlet water.
In the event of any failure, refer to the "TROUBLESHOOTING" section

PROGRAMME CHART

Max load 7 Kg Power consumption in off-mode 0.5 W / in left-on mode 8 W							Detergents and additives			Recommended detergent		Residual dampness % **	Energy consumption kWh	Total water lt
Programme		Temperatures		Max. spin speed (rpm)	Max load (kg)	Duration (Minutes)	Prewash	Main wash	Softener	Powder	Liquid			
		Default	Range				1	2	3					
	Mixed	40°C	❄ - 40°C	1000	3,5	***	–	●	○	–	✔	–	–	–
	White	60°C	❄ - 90°C	1400	7	***	● (90°)	●	○	✔	✔	–	–	–
	Cotton	40°C	❄ - 60°C	1400	7	220	–	●	○	✔	✔	53	0,97	75
	Eco Cotton	60°C	60°C	1400	7	270	–	●	○	✔	✔	53	0,82	52,5
			40°C	1400	7	220	–	●	○	✔	✔	53	0,97	75
	Sport	40°C	❄ - 40°C	600	3,5	***	–	●	○	–	✔	–	–	–
	Duvet	30°C	❄ - 30°C	1000	2	***	–	●	○	–	✔	–	–	–
	Jeans	40°C	❄ - 40°C	800	3,5	***	–	●	○	–	✔	–	–	–
	Spin & Drain	–	–	1400	7	***	–	–	–	–	–	–	–	–
	Rinse & Spin	–	–	1400	7	***	–	–	○	–	–	–	–	–
30'	**Rapid 30'**	30°C	❄ - 30°C	800	3	***	–	●	○	–	✔	–	–	–
15°	**Colours 15°**	15°C	15°C	1000	3,5	***	–	●	○	–	✔	–	–	–
	Wool	40°C	❄ - 40°C	800	1,5	***	–	●	○	–	✔	–	–	–
	Delicates	30°C	❄ - 30°C	0	1	***	–	●	○	–	✔	–	–	–
	Synthetics	40°C	❄ - 60°C	1200	4	195	–	●	○	✔	✔	33	0,75	72

● Dosing required ○ Dosing optional

Eco Cotton - Test wash cycles in compliance with regulations 1061/2010
These are the reference programs for the energy label. Set this wash cycles with a temperature of 40°C or 60°C. They are the most efficient programmes in terms of energy and water consumption for washing normally soiled cotton laundry. The actual water temperature may differ from the declared one.

For all Test Institutes
Long wash cycle for cottons: set wash cycle **Cotton** with a temperature of 40°C.
Synthetic program along: set wash cycle **Synthetics** with a temperature of 40°C.

This data may differ in your home due to changing conditions in inlet water temperature, water pressure etc. Approximate programme duration values refer to the default setting of the programmes, without options.

** After programme end and spinning with maximum selectable spin speed, in default programme setting.

*** **The duration of the programme is shown on the display.**

6th Sense - the sensor technology adapts water, energy and programme duration to your wash load.

PRODUCT DESCRIPTION

1. Worktop
2. Detergent dispenser
3. Control panel
4. Door handle
5. Door
6. Water filter
7. Adjustable feet (4)

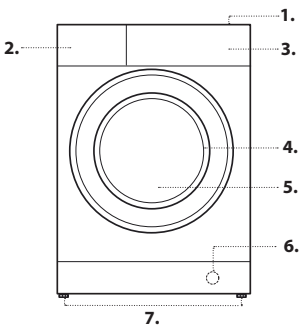

DETERGENT DISPENSER

Compartment 1: Pre-wash detergent (powder)
Compartment 2: Washing detergent (powder or liquid)
Compartment 3: Additives (fabric softeners, etc.)
The fabric softener must not exceed the "MAX" level.

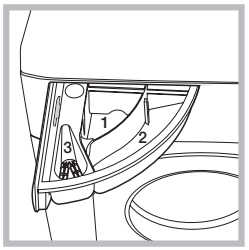

! Use powder detergent for white cotton garments, for pre-washing, and for washing at temperatures over 60°C.
! Follow the instructions given on the detergent packaging.

PROGRAMMES

For choosing the appropriate programme for your kind of laundry, always respect the instructions on the care labels of the laundry. The value given in the tub symbol is the maximum temperature possible for washing the garment.

Mixed
For washing lightly to normally soiled resilient garments in cotton, linen, synthetic fibres and mixed fibres.

White
For washing normally to heavily soiled towels, underwear, table and bed linen, etc in resilient cotton and linen. Only when the temperature is selected at 90°C the cycle is provided with a prewash phase before main washing phase. In this case it is recommended to add detergent both, in the prewash and main wash section.

Cotton
Normally to heavily soiled and robust cottons .

Eco Cotton
For washing normally soiled cotton garments. At 40°c and 60°C, this is the standard cotton programme and the most efficient in terms of water and energy consumption.

Sport
For washing lightly soiled sports clothing (tracksuits, shorts, etc.). For best results, we recommend not exceeding the maximum load indicated in the ,"PROGRAMME CHART". We recommend using liquid detergent , and adding the amount suitable for half-load.

Duvet
Designed for washing eiderdown padded items such as double or single duvets, cushions and anoraks. It is recommended to load such padded items in the drum with the edges folded inwards and not to exceed ¾ of the drum's volume. For optimal washing, we recommend using a liquid detergent.

Jeans
Turn garments inside-out before washing and use a liquid detergent.

Spin & Drain
Spins the load then empties the water. For resilient garments. If you exclude the spin cycle, the machine will drain only

Rinse & Spin
Rinses and then spins. For resilient garments.

Rapid 30'
For washing lightly soiled garments quickly. This cycle lasts only 30 minutes, saving time and energy.

Colours 15°
This cycle helps protect colours by washing in cold water (15°C) and uses less energy to heat the water while still offering satisfactory wash results. Suitable for lightly soiled, ustained garments. This cycle offers wash results comparable to 40°c mixed at just 15°C

Wool
All wool garments can be washed using programme ,"Wool" even those carryng the "hand-wash only " label. For best results, use special detergents and **do not exceed max kg declaration of laundry**.

Delicates
For washing particularly delicate garments. Preferably turn garments inside out before washing.

Synthetics
For washing soiled garments made from synthetic fibres (such as polyester, polyacrylic, viscose, etc.) or cotton/synthetic blends.

FIRST TIME USE

To remove any manufacturing debris select the "Cotton" programme at a temperature of 60°C. Pour a small quantity of detergent powder into the main wash **2** compartment of the detergent dispenser (maximum 1/3 of the quantity the detergent manufacturer recommends for lightly soiled laundry). Start the programme **without adding any laundry**.

DAILY USE

Prepare your laundry according to the recommendations in the "HINTS AND TIPS" section. Load the laundry, close the door, open the water tap and press the "ON/OFF" button to switch the washing machine on, the "Start/Pause" button flashes. Turn the programme selector to the desired programme and select any option if needed. The temperature and spin speed can be changed by pressing the "Temperature" button or the "Spin" button. Pull out the detergent dispenser and add the detergent (and additives/softener) now. Observe the dosing recommendations on the detergent pack. Then close the detergent dispenser.

STARTING CYCLE

Press the "Start/Pause" button.
The machine will lock the door (symbol on) and the drum will start to rotate; the door will be unlocked (symbol OFF) and then locked again (symbol on) as preparation phase of each washing cycle. The "Clicking" noise is part of the door locking mechanism. Water will enter the drum and start the washing phase once the door is locked.

PAUSE A RUNNING PROGRAMME

To pause the wash cycle, press the "Start/Pause"; the indicator light will go off and the remaining time on display flash. To start the wash cycle from the point at which it was interrupted press the button again.

OPEN THE DOOR, IF REQUIRED

After starting a programme, the "Door locked" indicator lights up to show that the door can not be opened. As long as a wash programme is running, the door remains locked. To open the door while a programme is in progress, press the "Start/Pause" to pause the programme. Provided the water level and/or temperature is/are not too high, the "Door locked" indicator light goes off and you can open the door. For example to add or remove laundry. Press the "Start/Pause" button again to continue the programme.

PROGRAMME END

The "Door locked" indicator light goes off and the display shows "End". To switch off the washing machine after programme ends press the "ON/OFF" button, the lights goes off. If you do not press "ON/OFF" button, the washing machine will switch off automatically after about a half of an hour. Close the water tap, open the door and unload the washing machine. Leave the door ajar to allow the drum to dry.

OPTIONS

! If the selected option is incompatible with the programme set, the incompatibility will be signalled by a buzzer (3 beeps) and the corresponding indicator light will flash.
! If the selected option is incompatible with another previously set option, only the most recent selection will remain active.

Clean+
Clean+ is an option working on 3 different levels (Intensive, Daily and Fast) that are specially designed to set the right washing action, depending on your cleaning needs:

Intensive **:** this option is designed for high levels of dirtiness, removing most stubborn stains.

Daily **:** this option is designed to remove everyday stains.

Fast **:** this option is designed to remove lightly soiled stains.

Intensive rinse
By selecting this option, the efficiency of the rinse is increased and optimal detergent removal is guaranteed. It is particularly useful for sensitive skin. Press the button once, two or three times to select an additional 1 , 2 or 3 rinses after the standard cycle rinse and remove all traces of detergent. Press the button again to go back to the "Normal rinse" rinse type.

Start delay
To set the selected programme to start at a later time, press the button to set the desired delay time. Symbol lights on the display when this fuction is enabled. To cancel the delayed start, press the button again until the value ,"0" is shown on the display.

FreshCare+
This option enhances washing performance by generating steam

to inhibit the proliferation of the main bad odour sources inside the machine. After steam phase, the washing machine will perform gentle tumbling through slow rotations of the drum. FreshCare+ option starts after the cycle ends for a maximum duration of 6h and you can interrupt at any time by pressing any button on control panel or turning the knob. (*) Wait around 5' before open the door.

Temperature

Every programme has a predefined temperature. If you want to change the temperature, press the "Temperature" button. The value appears on the display.

Spin

Every programme has a predefined spin speed. If you want to change the spin speed, press the "Spin" button. The value appears on the display.

Demo mode

This appliance is equipped with Demo mode function. For more information see the USER MANUAL/ Demo Mode.

KEY LOCK

To lock the control panel, press and hold the "Key lock" button for approximately 3 seconds. The symbol will light up on the display to indicate that the control panel has been locked (with the exception of the "ON/OFF" button). This prevents unintentional changes to programmes, especially with children near the machine. To unlock the control panel, press and hold the "Key lock" button for approximately 3 seconds .

BLEACHING

If you wish to bleach the laundry, load the washing machine and set the "Rinse & Spin" programme .

Start the machine and wait for it to complete the first water filling cycle (roughly 2 minutes). Put the machine in pause mode by pressing the "Start/Pause" button, open the detergent drawer and pour the bleach (observe the recommended doses indicated on the package) into the main wash compartment where the partition was previously mounted. Restart the cycle by pressing the "Start/Pause" button.

If desired, it is possible to add fabric softener into the appropriate compartment of the detergent drawer.

HINTS AND TIPS

Sort your laundry according to

Type of fabric/care label (cotton, mixed fibres, synthetics, wool, handwash items). Colour (separate coloured and white items, wash new coloured items separately). Delicates (wash small items – like nylon stockings – and items with hooks – like bras – in a cloth bag or pillow case with zip).

Empty all pockets

Objects like coins or lighters can damage your laundry as well as the drum.

CLEANING & MAINTENANCE

For any cleaning and maintenance, switch off and unplug the washing machine. Do not use flammable fluids to clean the washing machine.

Cleaning the outside of the washing machine

Use a soft damp cloth to clean the outer parts of the washing machine. Do not use glass or general purpose cleaners, scouring powder or similar to clean the control panel – these substances might damage the printing.

Checking the water supply hose

Check the inlet hose regularly for brittleness and cracks. If damaged, replace it by a new hose available through our After-Sales Service or your specialist dealer. Depending on the hose type: If the inlet hose has a transparent coating, periodically check if the colour intensifies locally. If yes, the hose may have a leak and should be replaced

Cleaning the mesh filters in the water supply hose

Close the tap and loosen the inlet hose on the tap. Clean the internal mesh filter and screw the water inlet hose back onto the tap. Now unscrew the inlet hose on the rear of the washing machine. Pull off the mesh filter from the washing machine connection with universal pliers and clean it. Refit the mesh filter and screw the inlet hose on again. Turn on the tap and ensure that the connections are completely water-tight.

Cleaning the water filter / draining residual water

If you used a hot wash programme, wait until the water has cooled down before draining any water. Clean the water filter regularly, to avoid that the water cannot drain after the wash due to obstruction of the filter. If the water cannot drain, the display indicates that the water filter may be clogged.

Place a broad, flat container beneath the water filter, to collect the drain water. Slowly turn the filter counterclockwise until water flows out. Let the water flow out, without removing the filter. When the container is full, close the water filter by turning it in clockwise. Empty the container. Repeat this procedure until all the water has drained. Lay a cotton cloth beneath the water filter, which can absorb a small amount of rest water. Then remove the water filter by turning it out anti clockwise. Clean the water filter: remove residues in the filter and clean it under running water. Reinsert the water filter again by turning it in clockwise direction. Make sure to turn it in as far as it goes; the filter handle must be in vertical position. To test water tightness of the water filter, you can pour about 1 liter of water into the detergent dispenser.

TRANSPORT AND HANDLING

Never lift the washing machine by holding it at the worktop.

Pull out the mains plug, and close the water tap. Make sure that door and detergent dispenser are properly closed. Disconnect the inlet hose from the water tap, and remove the drain hose from your draining point. Remove all rest water from the hoses, and fix them so that they cannot get damaged during transport. Refit the transport bolts. Follow the instructions for removing the transport bolts in the INSTALLATION GUIDE in reverse order.

TROUBLESHOOTING

The washing machine may sometimes not work properly for certain reasons. Before calling the After-sales service, it is recommended to check to see if the problem can be easily resolved using the following list.

Anomalies:	Possible causes / Solution:
The washing machine does not turn on.	• The plug is not inserted into the electrical outlet, or not enough to make contact. • There has been a power failure.
The wash cycle does not start.	• The door is not fully closed. • The “ON/OFF” button has not been pressed. • The “Start/Pause” button has not been pressed. • The water tap is not open. • A “Start delay” has been set.
The washing machine does not fill with water (the message “h2o” is shown on the display). “Beep” sound every 5 seconds.	• The water intake hose is not connected to the tap. • The hose is bent. • The water tap is not open. • The mains water supply has been shut off. • There is not enough pressure. • The “Start/Pause” button has not been pressed.
The washing machine loads and drains water continuously.	• The drain hose has not been installed at 65 to 100 cm from the ground. • The end of the drain hose is immersed in water. • The drain connector on the wall does not have an air vent. • If the problem persists after having performed these checks, close the water tap, shut off the washing machine, and call the After-sales service. If the dwelling is located on one of the uppermost floors of a building, a siphon effect can sometimes occur, thus causing the washing machine to load and drain water continuously. Special anti-siphon valves are available on the market to prevent these types of problems.
The washing machine does not drain or does not spin.	• The programme does not include the draining function: with certain programmes it must be activated manually. • The drain hose is bent. • The drain line is obstructed.
The washing machine vibrates excessively during the spin cycle.	• At the time of installation, the drum was not properly unblocked. • The washing machine is not level. • The washing machine is squeezed between furniture and the wall.
The washing machine leaks water.	• The water intake hose has not been tightened properly. • The detergent dispenser is clogged. • The drain hose has not been properly fastened.
The machine is locked and the display flashes, indicating an error code (e.g. F-01, F-..).	• Shut off the machine, disconnect the plug from the outlet, and wait about 1 minute before turning it back on. • If the problem persists, call the After-sales service.
Too much foam is formed.	• The detergent is not compatible with the washing machine (it must bear the wording “for washing machines”, “for hand washing and washing machines”, or something similar). • The dosage was excessive.
Door is locked, with or without failure indication, and the programme does not run.	• Door is locked in case of power breakdown. Programme will continue automatically as soon as the mains is available again. • Washing machine is in a standstill. Programme will continue automatically after the origin of the standstill does not persist anymore.

You can download the H&S INSTRUCTIONS, USER MANUAL, PRODUCT FICHE and ENERGY DATA by:

- Visiting our website - **http://docs.whirlpool.eu**
- Using QR code
- Alternatively, **contact our After-sales Service** (See phone number in the warranty booklet). When contacting our After-sales Service, please state the codes provided on your product’s identification plate.

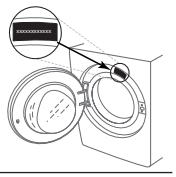

Whirlpool