THANK YOU FOR BUYING A INDESIT PRODUCT

In order to receive a more complete assistance, please register your product on **www.indesit.com/register**

Before using the appliance carefully read the Safety Instruction.
Before using the machine, it is imperative that the transport bolts are removed.
For more detailed instructions on how to remove them, see the Installation Guide.

CONTROL PANEL

1. ON/OFF button
2. START/PAUSE button and indicator light
3. TEMPERATURE button
4. DISPLAY
5. CHILD LOCK button
6. OPTIONS button
7. DELAYED START button
8. SPIN button
9. WASH CYCLE SELECTOR KNOB

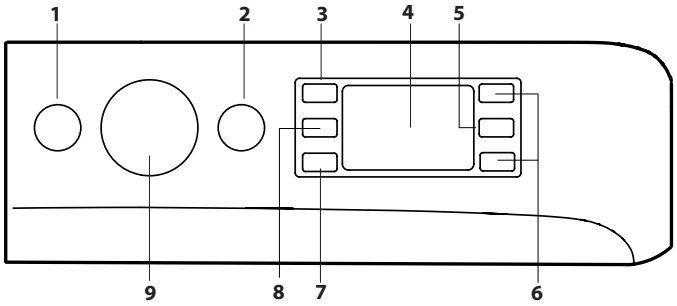

WASH CYCLE TABLE

Maximum load 7 kg Power input in off mode 0.5 W / in left-on mode 8 W							Detergents and Additives			Recommended detergent		Residual dampness %	Energy consumption kWh	Total water l
Wash cycle		Temperature		Maxim spin (r.p.m.)	Maximum load (kg)	Duration (h : m)	Prewash	Wash	Fabric softener	Powder	Liquid			
		Setting	Range				1	2	3					
1	**Mixed**	40°C	❄ – 40°C	1000	7	**	–	●	○	–	✔	–	–	–
2	**Cotton**	60°C	❄ – 60°C	1000	7	**	–	●	○	✔	✔	–	–	–
3	**Cotton**	40°C	❄ – 40°C	1200	3,5	**	–	●	○	–	✔	–	–	–
4	**Cotton**	30°C	❄ – 30°C	800	3,5	0:30	–	●	○	–	✔	73	0,19	31
5	**Synthetics**	30°C	❄ – 30°C	1000	4	**	–	●	○	–	✔	–	–	–
6	**Silk & Delicates**	30°C	❄ – 30°C	0	1	**	–	●	○	–	✔	–	–	–
7	**Wool**	40°C	❄ – 40°C	800	1,5	**	–	●	○	–	✔	–	–	–
8	**Express**	20°C	❄ – 20°C	800	1,5	**	–	●	○	–	✔	–	–	–
9	**Cotton (2)**	40°C	❄ – 60°C	1400	7	3:40	–	●	○	✔	✔	50	0,98	75
10	**Synthetics (3)**	40°C	❄ – 60°C	1200	4	2:55	–	●	○	✔	✔	35	0,86	60
11	**Whites**	60°C	❄ – 90°C	1400	7	2:30	●+90°	●	○	✔	✔	52	1,36	74,8
12	**Sport**	30°C	❄ – 30°C	600	3,5	**	–	●	○	–	✔	–	–	–
13	**20°C**	20°C	❄ – 20°C	1400	7	1:50	–	●	○	–	✔	52	0,16	64
14	**Eco Cotton (1)**	60 °C	60 °C	1400	7	2:55	–	●	○	✔	✔	53	0,90	49
			40 °C	1400	7	3:40	–	●	○	✔	✔	50	0,98	75
15	**Rinse + Spin**	–	–	1400	7	**	–	–	○	–	–	–	–	–
16	**Spin + Drain ***	–	–	1400	7	**	–	–	–	–	–	–	–	–

● Required dosage ○ Optional dosage

The cycle duration indicated on the display or instruction manual is an estimate based on standard conditions. The actual duration may vary in relation to several factors, such as the temperature and pressure of the incoming water, ambient temperature, amount of detergent, load quantity and type, load balancing and any additional options selected.

1) Test wash cycle in compliance with regulation 1061/2010:
This cycle is designed for normally soiled cotton loads and is the most efficient in terms of both electricity and water consumption; it should be used for garments washable at 60°C or at 40°C. The actual washing temperature may differ from the indicated value.

For all testing institutes:
2) Long cotton cycle: set cycle 9 at a temperature of 40°C.
3) Long synthetics cycle: set cycle 10 at a temperature of 40°C.

* By selecting the 16 cycle and excluding the spin cycle, the washing machine will drain only.

** The duration of the wash cycles can be checked on the display.

PRODUCT DESCRIPTION

1. Top
2. Detergent dispenser drawer
3. Control panel
4. Handle
5. Porthole door
6. Drain pump (behind the plinth)
7. Plinth (removable)
8. Adjustable feet (2)

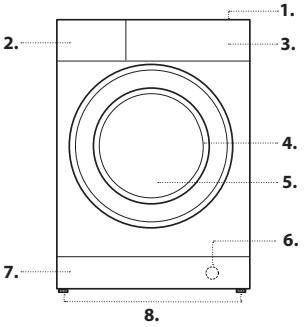

DETERGENT DISPENSER DRAWER

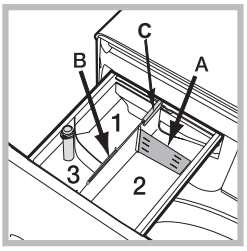

Compartment 1: Pre-wash detergent (powder)
Compartment 2: Washing detergent (powder or liquid)
If liquid detergent is used, the removable plastic partition **A** (supplied) should be used for proper dosage. If powder detergent is used, insert the partition into slot **B**.
Compartment 3: Additives (fabric softener, etc.)
The fabric softener must never exceed the "max" level indicated on the central pin.
! Use powder detergent for white cotton garments, for pre-washing, and for washing at temperatures over 60°C.
! Follow the instructions given on the detergent packaging.
! To remove the drawer, press lever **C** and pull the drawer outwards.

WASH CYCLES

Follow the instructions on the symbols of the garment's wash care label. The value indicated in the symbol is the maximum recommended temperature for washing the garment.

Mixed
To wash mixed and coloured items together.
Cotton 60°
Cycle designed to wash cotton garments - mainly white items. It can be used with powder detergent too.
Cotton 40°
Short cycle designed to wash delicate cotton items.
Cotton 30°
Short cycle designed to wash a mixed load of cotton and synthetic fabrics - white and coloured items together.
Synthetics 30°
Suitable for washing moderately soiled garments made of synthetic fibres (e.g. polyester, polyacrylic, viscose, etc.) or mixed synthetic-cotton fibres.
Silk & Delicates
To wash all silk and delicate garments. We recommend the use of special detergent which has been designed to wash delicate clothes.
Wool
All wool garments can be washed using programme 7, even those carrying the "hand-wash only" label. For best results, use special detergents and do not exceed 1,5 kg of laundry.
Express
This cycle refreshes your garments in just 15 minutes.
Cotton 40°-60°
Suitable for washing towels, underwear, table cloths, etc. made of resistant linen and cotton that are moderately to heavily soiled.
Synthetics 40°-60°
Specific for synthetic items. If the dirt is difficult to remove, the temperature can be increased up to 60° and powder detergent can be used too.
Whites
For heavily soiled whites and resistant colours..
Sport
Is designed for washing lightly soiled sports clothing (tracksuits, shorts, etc.); for best results, we recommend not exceeding the maximum load indicated in the "Wash Cycle Table". We recommend using liquid detergent, and adding the amount suitable for a half-load.
20°C
For washing lightly soiled cotton garments, at a temperature of 20 °C.
Eco cotton
Suitable for washing moderately soiled cotton garments. At 40°C and 60°C it is the standard cycle for washing cotton garments, and is the most efficient in terms of combined water and electricity consumption.
Rinse + Spin
Designed for rinsing and spinning.
Spin + Drain
Designed to spin and drain the water.

DISPLAY

The display is useful when programming the machine and provides a lot of information.

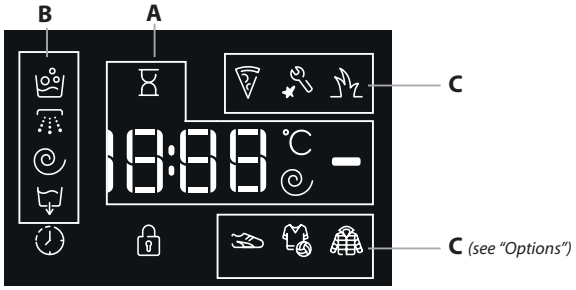

The duration of the available wash cycles and the remaining time of a running cycle appear in section **A**; if the Delayed Start option has been set, the countdown to the start of the selected cycle will appear.
Pressing the corresponding button allows for viewing the maximum spin speed and temperature values attained by the machine during the set wash cycle, or the values selected most recently, if these are compatible with the set wash cycle.
The hourglass flashes while the machine processes the data on the basis of the selected cycle. After a maximum of 10 minutes, the icon remains steady lit and the final time remaining is displayed. The "hourglass" icon will then switch off approximately 1 minute after the final time remaining has been displayed.
The "washing phases" relative to the selected cycle and the "washing phase" of the running cycle appear in section **B**:

Wash
Rinse
Spin
Drain

When lit, the symbol indicates that the set "Delayed Start" value has appeared on the display.
There are three levels in section **C** relative to the washing options.

DOOR LOCKED INDICATOR

When lit, the symbol indicates that the door is locked. To prevent any damage, wait until the symbol turns off before opening the door.
To open the door while a cycle is in progress, press the START/PAUSE button ▷II; if the symbol is off, the door can be opened.

FIRST-TIME USE

Once the appliance has been installed, and before it is used for the first time, run a wash cycle with detergent and no laundry, by setting the "Auto-Clean" cycle.

DAILY USE

Prepare the laundry by following the suggestions appearing under the "TIPS AND SUGGESTIONS" section.
- Press the ON/OFF button ⏻; the START/PAUSE indicator light ▷II will flash slowly green.
- Open the door. Load the laundry while making sure not to exceed the maximum load quantity indicated in the Wash Cycle Table.
- Pull out the detergent dispenser drawer and pour the detergent into the relevant compartments as described in "DETERGENT DISPENSER DRAWER" section.
- Close the door.
- Use the WASH CYCLE selector knob to select the desired wash cycle: it will be associated with a specific temperature and spin speed that can be modified. The duration of the cycle will appear on the display.
- Modify the temperature and/or spin speed: the machine automatically displays the maximum temperature and spin speed values set for the selected cycle, or the most recently-used settings if they are compatible with the selected cycle. Pressing the °C button gradually reduces the temperature down to the cold wash "OFF" setting. Pressing the button gradually reduces the spin speed until it is completely excluded ("OFF" setting). Pressing these buttons again restores the maximum values.
- Select the desired options.

STARTING CYCLE
Press the START/PAUSE ▷II button.
The machine will lock the door (symbol on) and the drum will start to rotate; the door will be unlocked (symbol off) and then locked again (symbol on) as preparation phase of each washing cycle. The "Clicking" noise is part of the door locking mechanism. Water will enter the drum and start the washing phase once the door is locked.

PAUSING A CYCLE

To pause the wash cycle, press the START/PAUSE ▷II button again; the indicator light will flash amber. If the symbol is not lit, the door may be opened. To start the wash cycle from the point at which it was interrupted, press the START/PAUSE ▷II button again.

OPENING THE DOOR, IF NECESSARY

Once a cycle starts, the symbol turns on to signal that the door cannot be opened. While a wash cycle is running, the door remains locked. To open the door while a cycle is under way, for example, to add or remove garments, press the START/PAUSE ▷II button to pause the cycle; the indicator light will flash amber. If the symbol is not lit, the door may be opened. Press the START/PAUSE ▷II button again to continue the cycle.

CHANGING A RUNNING WASH CYCLE

To change a wash cycle while it is in progress, pause the washing machine using the START/PAUSE ▷II button (the relative indicator light will flash amber), then select the desired cycle and press the START/PAUSE ▷II button again.
! To cancel a cycle that has already begun, press and hold the ON/OFF ⏻ button. The cycle will be stopped and the machine will switch off.

END OF THE CYCLE

This will be indicated by the word "END" on the display; when the symbol switches off, the door may be opened. Open the door and switch off the machine. If you do not press ON/OFF ⏻ button, the washing machine will switch off automatically after about a 10 minutes. Close the water tap, open the door and unload the washing machine. Leave the door ajar to allow the drum to dry.

OPTIONS

- If the selected option is not compatible with the set wash cycle, the indicator light will flash and the option will not be activated.
- If the selected option is not compatible with another previously selected option, the indicator light will flash accompanied by a buzzer (3 beeps), and only the latter option will be activated; the indicator light corresponding to the activated option will turn on.

Stain removal
This option allows for selecting the type of dirt so as to optimally adjust the cycle for removing the stains. The following types of dirt can be selected:
- **Food**: for stains caused by foodstuffs and beverages, for example.
- **Work**: for grease and ink stains, for example.
- **Outdoor**: for mud and grass stains, for example.

! The wash cycle duration varies according to the type of selected dirt.

Sport
This option allows for selecting the most suitable programme for any type of sports clothing, and is designed to remove dirt while optimally preserving the technical features of the garments. The various Sport option levels offer the following wash cycles:
- **Sport Shoes**, a cycle designed to safely wash up to 2 pairs of sports shoes simultaneously.
- **Gym Kit,** a cycle designed to simultaneously wash any type of sports clothing together with gym towels.
- **Technical Wear,** designed for specifically washing waterproof garments or clothing with special technical fibres like Gore-Tex, so as to optimise washing performance while preserving their technical properties over time. Do not use fabric softeners for garments with technical fibres.

Delayed Start
To set a delayed start for the selected cycle, press the corresponding button repeatedly until the desired delay period has been reached. When this option has been activated, the symbol lights up on the display. To remove the delayed start setting, press the button until the word "OFF" appears on the display.

Temperature °C
Each wash cycle has a pre-defined temperature. To modify the temperature, press the °C button. The value will appear on the display.

Spin
Each wash cycle has a pre-defined spin speed. To modify the spin speed, press the button. The value will appear on the display.

CHILD LOCK

To activate the control panel lock, press and hold the button for approximately 2 seconds. The lit " " symbol signals that the control panel is locked. This prevents wash cycles from being modified accidentally (except for the ON/OFF button), especially if there are children in the home. To deactivate the control panel lock, press and hold the button for approximately 2 seconds.

TIPS AND SUGGESTIONS

Divide the laundry according to:
Type of fabric (cotton, mixed fibres, synthetics, wool, garments to be hand-washed). Colour (separate coloured garments from whites, wash new coloured garments separately). Delicates (small garments – such as nylon stockings – and items with hooks – such as bras: insert them in a fabric bag).

Empty the pockets:
Objects such as coins or lighters can damage the washing machine and the drum. Check all buttons.

Follow the dosage recommendation / additives
It optimizes the cleaning result, it avoids irritating residues of surplus detergent in your laundry and it saves money by avoiding waste of surplus detergent.

Use low temperature and longer duration
The most efficient programmes in terms of energy consumption are generally those that perform at lower temperatures and longer duration.

Observe the load sizes
Load your washing machine up to the capacity indicated in the "Wash Cycle Table" table to save water and energy.

Noise and remaining moisture content
They are influenced by the spinning speed: the higher the spinning speed in the spinning phase, the higher the noise and the lower the remaining moisture content.

CARE AND MAINTENANCE

Before performing cleaning and maintenance, switch the washing machine off and disconnect it from the mains power. Do not use flammable liquids to clean the washing machine. Clean and maintain your washing machine periodically (at least 4 times per year).

Disconnect the water and power supplies
Close the water tap after every wash. This will limit wear on the hydraulic system inside the washing machine and help to prevent leaks.
Unplug the washing machine when cleaning it and during all maintenance work.

Clean the washing machine
The outer parts and rubber components of the appliance can be cleaned using a soft cloth soaked in lukewarm soapy water. Do not use solvents or abrasives.
The washing machine has a "Auto-Clean" cycle for its internal parts; it must be run without any load in the drum.
To optimise this cycle, it is possible to use either detergent (10% of the quantity specified for lightly soiled garments) or special additives to clean the washing machine. We recommend running a cleaning cycle every 40 wash cycles.
To start the cycle press buttons and simultaneously for 5 seconds. The cycle will start automatically and will run for about 70 minutes. To stop the cycle, press the START/PAUSE button.

Clean the detergent dispenser drawer
Wash it under running water; this operation should be repeated frequently.

Care for the door and drum
Always leave the porthole door ajar in order to prevent unpleasant odours from forming.

Clean the pump
The washing machine is fitted with a auto-cleaning pump that does not require any maintenance. Small items (such as coins or buttons) may sometimes fall into the protective pre-chamber situated at the base of the pump.
! Make sure the wash cycle has ended and unplug the appliance.
To access the pre-chamber:
1. remove the cover panel on the front of the machine by first pressing it in the centre then pushing downwards on both sides to extract it;
2. loosen the drainage pump cover by turning it anti-clockwise: it is normal for some water to leak out;
3. clean the inside thoroughly;
4. screw the cover back on;
5. put the panel back in place, making sure the hooks slot in place before pushing the panel onto the appliance.

Check the water inlet hose
Check the water inlet hose at least once a year. If it is cracked or broken, it must be replaced: during wash cycles, the high pressure of the water could suddenly split the hose open.
! Never use hoses that have already been used.

LOAD BALANCING SYSTEM

Before every spin cycle, to avoid excessive vibrations before every spin and to distribute the load in a uniform manner, the drum rotates continuously at a speed which is slightly greater than the washing rotation speed. If, after several attempts, the load is not balanced correctly, the machine spins at a reduced spin speed. If the load is excessively unbalanced, the washing machine performs the distribution process instead of spinning. To encourage improved load distribution and balance, we recommend small and large garments are mixed in the load.

ACCESSORIES

Contact our Technical Assistance Service to check whether the following accessories are available for this washing machine model.

Stacking kit
With this accessory you can secure the tumble dryer to the upper part of your washing machine to save space and facilitate loading and unloading of the tumble dryer.

TRANSPORT AND HANDLING

Do not lift the washing machine by gripping it from the upper section.
Unplug the appliance and close the water tap. Check that the door and detergent dispenser drawer are tightly closed. Detach the filling hose from the water tap then detach the drain hose. Empty all the water remaining in the hoses and secure the latter so that they do not get damaged during transport. Apply the transport bolts back on. Repeat, in reverse order, the transport bolt removal procedure described in the "Health & Safety and Installation Guides".

DEMO MODE: to deactivate this function, switch the washing machine OFF. Than press and hold "START/PAUSE" ▷II button, within 5 seconds press also "ON/OFF" ⏻ button and hold both buttons for 2 seconds.

TROUBLESHOOTING

The washing machine may occasionally fail to work. Before contacting the Technical Assistance Service, make sure that the problem cannot be easily solved using the following list.

Anomalies	Possible causes / Solution
The washing machine does not start.	The appliance is not plugged into the socket, or not sufficiently to make contact.
	There is no power in the house.
The wash cycle does not start.	The washing machine door is not closed properly.
	The ON/OFF ⏻ button has not been pressed.
	The START/PAUSE ▷II button has not been pressed.
	The water tap has not been opened.
	A delay has been set for the start time.
The washing machine does not fill with water ("H2O" flashes on the display).	The water inlet hose is not connected to the tap.
	The hose is bent.
	The water tap has not been opened.
	There is no water supply in the house.
	The pressure is too low.
	The START/PAUSE ▷II button has not been pressed.
The washing machine continuously loads and unloads water.	The drain hose is not fitted between 65 and 100 cm from the floor.
	The free end of the hose is immersed in water.
	The wall drainage system does not have a breather pipe. If the problem persists even after these checks, turn off the water tap, switch the appliance off and contact the Technical Assistance Service. If the home is on one of the upper floors of a building, there may be problems relating to back-siphonage, causing the washing machine to fill with water and drain continuously. Special anti-siphon valves are available in shops and help to prevent this inconvenience.
The washing machine does not drain or spin.	The cycle does not include drainage: with certain cycles it must be started manually.
	The drain hose is bent.
	The drainage duct is clogged.
The washing machine vibrates a lot during the spin cycle.	The drum was not unlocked correctly during installation.
	The washing machine is not level.
	The washing machine is tucked between furniture cabinets and the wall.
The washing machine leaks.	The water inlet hose is not screwed on properly.
	The detergent dispenser drawer is obstructed.
	The drain hose is not properly attached.
The "Options" and START/ PAUSE ▷II indicator lights flash rapidly and the display visualises an error code (e.g.: F-01, F-...).	Switch off the machine and unplug it, wait for approximately 1 minute and then switch it back on again. If the problem persists, contact the Technical Assistance Service .
There is too much foam.	The detergent is not suitable for machine washing (it should be marked with "for washing machine use" or "hand wash and machine wash" or similar).
	Too much detergent was used.

You can download the Safety Instructions, Product Fiche and Energy data by:

- Visiting our website - **http://docs.indesit.eu**
- Using QR Code
- Alternatively, **contact our After-sales Service** (See phone number in the warranty booklet). When contacting our After-sales Service, please state the codes provided on your product's identification plate.
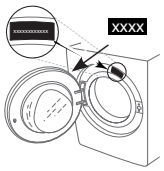
For User's Repair & Maintenance Information visit www.indesit .com