Bauknecht
Mehr als Technik

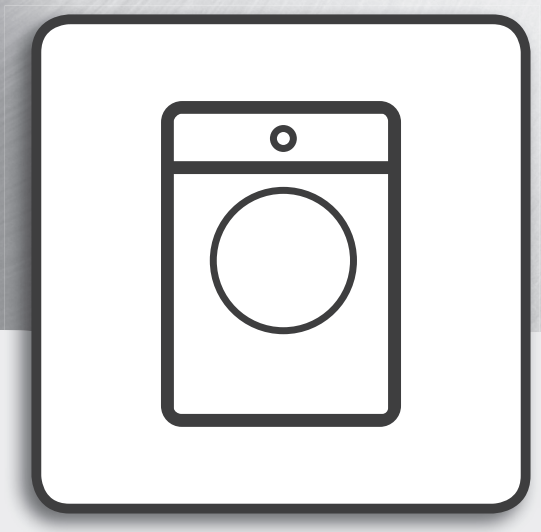

Health & Safety, Use & Care and **Installation** guide

www.bauknecht.eu/register

ENGLISH 3

ENGLISH
HEALTH & SAFETY, USE & CARE and **INSTALLATION** GUIDES



THANK YOU FOR BUYING A BAUKNECHT PRODUCT.
In order to receive a more complete assistance,
please register your appliance on **www.bauknecht.eu/register**

Index

Health and Safety Guide

SAFETY INSTRUCTIONS 5

SAFEGUARDING THE ENVIRONMENT 8

DECLARATION OF CONFORMITY 9

Use and Care guide

PRODUCT DESCRIPTION 10

APPLIANCE 10

DETERGENT DISPENSER 10

CONTROL PANEL 11

TECHNICAL DATA FOR WATER CONNECTION 12

DOOR 13

DRUM LIGHT (if available) 13

ACCESSORIES 13

HOW TO USE THE APPLIANCE 14

FIRST TIME USE 14

DAILY USE 15

PROGRAMMES AND OPTIONS 19

FUNCTIONS 27

INDICATORS 29

DOSING AID / FIRST USE 30

DOSING AID / DAILY USE 32

SAVING TIPS 33

Bauknecht
Mehr als Technik

CLEANING & MAINTENANCE 34
CLEANING THE OUTSIDE OF THE WASHING MACHINE. 34
CHECKING THE WATER SUPPLY HOSE 35
CLEANING THE MESH FILTERS IN THE WATER SUPPLY HOSE 36
CLEANING THE DETERGENT DISPENSER 37
CLEANING THE WATER FILTER / DRAINING RESIDUAL WATER 38
TRANSPORT AND HANDLING 40
TROUBLESHOOTING 41
DOOR – HOW TO OPEN IT IN CASE OF A FAILURE, TO TAKE OUT YOUR LAUNDRY 45
AFTER-SALES SERVICE 46

Installation Guide 47

SAFETY INSTRUCTIONS

IMPORTANT TO BE READ AND OBSERVED

Before using the washing machine carefully read Health and Safety and Use and Care guides.

Keep these instructions close at hand for future reference.

YOUR SAFETY AND THE SAFETY OF OTHERS IS VERY IMPORTANT.

This manual and the washing machine itself provide important safety warnings, to be read and observed at all times.



This is the safety alert symbol.

This symbol alerts you to potential hazards that can kill or hurt you and others.

All safety messages will follow the safety alert symbol or the word **DANGER** or **WARNING**. These words mean:

⚠ DANGER

Indicates a hazardous situation which, if not avoided, will cause serious injury.

⚠ WARNING

Indicates a hazardous situation which, if not avoided, could cause in serious injury.

All safety warnings give specific details of the potential risk presented and indicate how to reduce risk of injury, damage and electric shock resulting from improper use of the washing machine. Carefully observe the following instructions.

Failure to observe these instructions may lead to risks. The Manufacturer declines any liability for injury to persons or animals or damage to property if these advices and precautions are not respected.

Very young (0-3 years) and young children (3-8 years) shall be kept away unless continuously supervised.

Children from 8 years old and above and persons with reduced physical, sensory or mental capabilities or lack of experience and knowledge can use this washing machine only if they are supervised or have been given instructions on safe washing machine use and if they understand the hazards involved. Children shall not play with the washing machine. Cleaning and user maintenance shall not be made by children without supervision.

Remove the transport bolts.

The washing machine is fitted with transport bolts to avoid any possible damage to the interior during transport. Before using the machine, it is imperative that the transport bolts are removed.

After their removal, cover the openings with the 4 enclosed plastic caps.

Never open the door forcibly or use it as a step.

INTENDED USE OF THE PRODUCT

This washing machine is designed solely for domestic usage. To aim the washing machine as professional use is forbidden. The manufacturer declines all responsibility for inappropriate use or incorrect setting of the controls.

CAUTION: The washing machine is not intended to be operated by means of an external timer or separate remote control system.

Do not use the washing machine outdoors.

Do not store explosive or flammable substances such as aerosol cans and do not place or use gasoline or other flammable materials in or near the washing machine: a fire may break out if the washing machine is inadvertently switched on.

This washing machine is exclusively destined to treat machine washable laundry in quantities which are usual for private households.

INSTALLATION

Installation and repairs must be carried out by a qualified technician, in compliance with the manufacturer's instructions and local safety regulations. Do not repair or replace any part of the washing machine unless specifically stated in the user manual.

Children should not perform installation operations. Keep children away during installation of the washing machine. Keep the packaging materials (plastic bags, polystyrene parts, etc.) out of reach of children, during and after the installation of the washing machine.

Use protective gloves to perform all unpacking and installation operations.

After unpacking the washing machine, make sure that it has not been damaged during transport. In the event of problems, contact the dealer or your nearest After-sales Service.

The washing machine must be handled and installed by two or more persons.

Keep children away during installation of the washing machine.

The washing machine must be disconnected from the power supply before carrying out any installation operation.

During installation, make sure the washing machine does not damage the power cable.

Only activate the washing machine when the installation procedure has been completed.

After installation of the device wait a few hours before starting it, to acclimatize to the environmental conditions of the room.

Do not install your washing machine where it may be exposed to extreme conditions, such as: poor ventilation, high temperature or below 5°C or above 35°C.

When installing the washing machine make sure that the four feet are stable and resting on the floor, adjusting them as required, and check that the washing machine is perfectly level using a spirit level.

In case of wooden or so-called "floating floors" (for instance certain parquet or laminate floors), place the washing machine on a sheet of plywood at least 60 x 60 cm wide/ deep and at least 3 cm thick which is secured to the floor.

Use only new hoses to connect the washing machine to the water supply. Used hoses must not be used and should be discarded.

Move the washing machine without lifting it by the worktop.

Connect the water inlet hose(s) to the water supply in accordance with the regulations of your local water company.

For models dedicated only for cold water: Do not connect to the hot water supply.

For models with hot fill: the hot water inlet temperature must not exceed 60 °C.

Make sure that the ventilation openings in the base of your washing machine (if available on your model) are not obstructed by a carpet or other material.

The supply water pressure must be in range 0.1 -1 MPa.

If you want to place a dryer on top of your washing machine, first contact our After-Sales Service or your specialist dealer to verify if this is possible. This is only admitted if the dryer is fixed on the washing machine by using an appropriate stacking kit available through our After- Sales Service or your specialist dealer.

ELECTRICAL WARNINGS

Make sure the voltage specified on the rating plate corresponds to that of your home.

For installation to comply with current safety regulations, an omnipolar switch with minimum contact gap of 3mm is required.

Regulation require that the washing machine is earthed.

For washing machines with fitted plug, if the plug is not suitable for you socket outlet, contact a qualified technician.

Do not use extension leads, multiple sockets or adapters.

Do not connect the washing machine to a socket which can be operated by remote control.

The power cable must be long enough for connecting the washing machine, once fitted in its housing, to the main power supply.

Do not pull the power supply cable.

If the power cable is damaged it must be replaced with an identical one. The power cable must only be replaced by a qualified technician in compliance with the manufacturer instruction and current safety regulations. Contact an authorized service centre.

Do not operate this washing machine if it has a damaged mains cord or plug, if it is not working properly, or if it has been damaged or dropped. Do not immerse the mains cord or plug in water. Keep the cord away from hot surfaces.

The electrical components must not be accessible to the user after installation.

Do not touch the washing machine with any wet part of the body and do not operate it when barefoot.

ELECTRICAL CONNECTION FOR GREAT BRITAIN AND IRELAND ONLY

Fuse replacement

If the mains lead of this washing machine is fitted with a BS 1363A 13amp fused plug, to change a fuse in this type of plug use an A .S .T .A . approved fuse to BS 1362 type and proceed as follows:

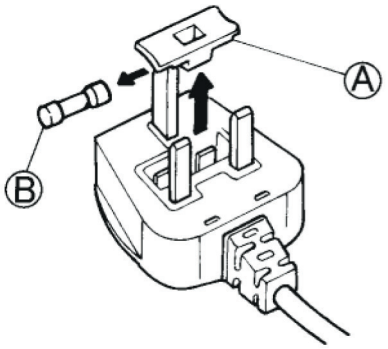

1 .Remove the fuse cover (A) and fuse (B).

2 .Fit replacement 13A fuse into fuse cover.

3 .Refit both into plug.

Important:

The fuse cover must be refitted when changing a fuse and if the fuse cover is lost, the plug must not be used until a correct replacement is fitted. Correct replacement are identified by the colour insert or the colour embossed in words on the base of the plug. Replacement fuse covers are available from your local electrical store.

For the Republic of Ireland only

The information given in respect of Great Britain will frequently apply, but a third type of plug and socket is also used, the 2-pin, side earth type.

Socket outlet/plug (valid for both countries)

If the fitted plug is not suitable for your socket outlet, contact After-Sales Service for further instruction. Do not attempt to change the plug yourself .This procedure needs to be carried out by a qualified technician in compliance with the manufacturer's instructions and current standard safety regulations.

CORRECT USE

Do not exceed the maximum load allowed. Check the maximum load allowed in the programme chart.

Turn off the tap when not in use.

Do not use any solvents (e.g. turpentine, benzene), detergents containing solvents, scouring powder, glass or general purpose cleaners, and flammable fluids; do not machine wash fabrics that have been treated with solvents or flammable liquids.

CLEANING AND MAINTENANCE

The washing machine must be disconnected from the power supply before carrying out any cleaning or maintenance operation.

Never use steam cleaning equipment.

SAFEGUARDING THE ENVIRONMENT

DISPOSING OF PACKAGING MATERIALS

The packaging material is 100% recyclable and is marked with the recycle symbol:

The various parts of the packaging must therefore be disposed of responsibility and in full compliance with local authority regulations governing waste disposal.

SCRAPPING OF HOUSEHOLD APPLIANCES

When scrapping the washing machine, make it unusable by cutting off the power cable and removing the doors and shelves (if present) so that children cannot easily climb inside and become trapped.

This washing machine is manufactured with recyclable

or reusable materials. Dispose of it in accordance with local waste disposal regulations.

For further information on the treatment, recovery and recycling of household electrical appliances, contact your competent local authority, the collection service for household waste or the store where you purchase the washing machine.

This washing machine is marked in compliance with European Directive 2012/19/EU, Waste Electrical and Electronic Equipment (WEEE).

By ensuring this product is disposed of correctly, you will help prevent potential negative consequences for the environment and human health, which could otherwise be caused by inappropriate waste handling of this product.

The symbol



on the product or on the accompanying documentation indicates that it should not be treated as domestic waste but must be taken to an appropriate collection centre for the recycling of electrical and electronic equipment.

DECLARATION OF CONFORMITY

This washing machine has been designed, constructed and distributed in compliance with the safety requirements of European Directives:

- 2006/95/EC Low Voltage Directive
- 2004/108/EC Electromagnetic Compatibility Directive.

PRODUCT DESCRIPTION

APPLIANCE

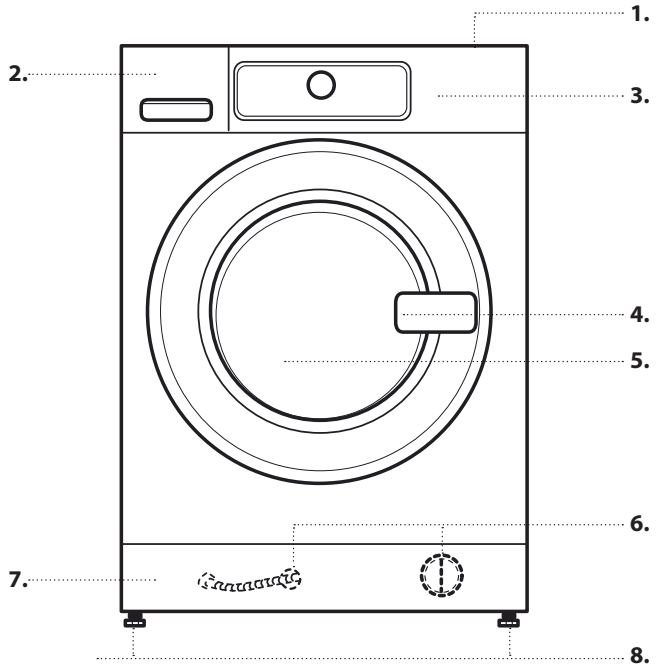

1. Worktop
2. Detergent dispenser
3. Control panel
4. Door handle
5. Door
6. Water filter / Emergency drain hose (if available) - behind plinth -
7. Plinth (removable)
8. Adjustable feet (4)

DETERGENT DISPENSER

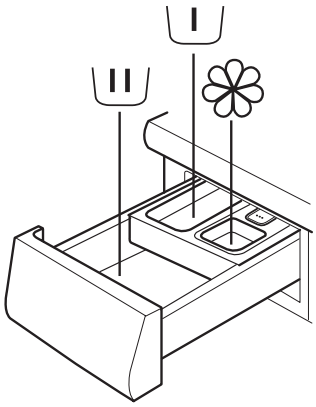

1. Main wash compartment 
- Detergent for the main wash
- Stain remover
- Water softener

2. Prewash compartment 
- Detergent for the prewash

3. Softener compartment 
- Fabric softener
- Liquid starch

Pour softener or starch solution only up to the "MAX" mark.

4. Release button 
(press to remove the detergent dispenser for cleaning)

DETERGENT RECOMMENDATIONS FOR VARIOUS TYPES OF LAUNDRY

White robust laundry	(cold-95°C)	Heavy duty detergents
White delicate laundry	(cold-40°C)	Mild detergents containing whitener and/or optical brighteners
Light/pastel- shaded colours	(cold-60°C)	Detergents containing whitener and/or optical brighteners
Intensive colours	(cold-60°C)	Colour detergents without whitener / optical brighteners
Black/dark colours	(cold-60°C)	Special detergents for black/dark laundry

CONTROL PANEL

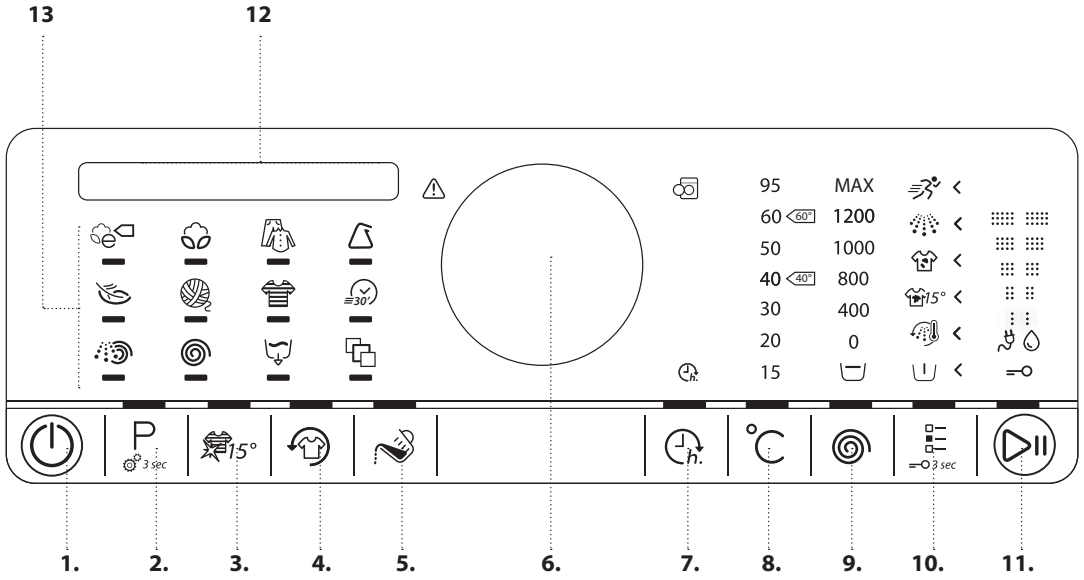

1. On/Off button
(Reset/Drain if pressed and held down)
2. Programme button
3. Colours 15° button
4. Fresh Care button
5. Dosing Aid button
6. Knob (Turn to select/Press to confirm)
7. Finish in button
8. Temperature button
9. Spin Speed button
10. Options button
(Key lock if pressed and held down)
11. Start / Pause button
12. Display
13. Programmes area

TECHNICAL DATA FOR WATER CONNECTION

WATER CONNECTION	
WATER SUPPLY	Cold
WATER TAP	3/4" threaded hose connector
MINIMUM WATER SUPPLY PRESSURE	100 kPa (1 bar)
MAXIMUM WATER SUPPLY PRESSURE	1000 kPa (10 bar)

DOOR

To open the door, pull the handle

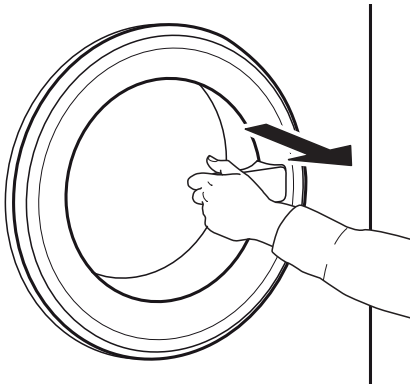

To close the door, hold the handle and push so that you can hear it click shut.

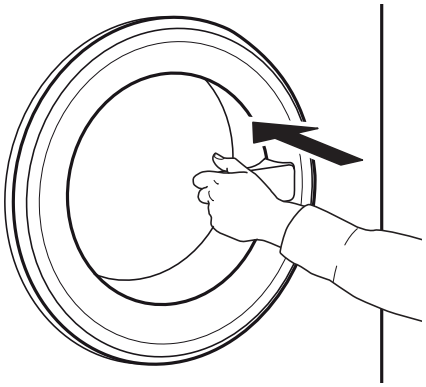

DRUM LIGHT (if available)

- During programme selection: the light goes on for laundry loading
- After programme start, the light fades on and off while the laundry load is detected.
- After programme end, when you open the door, the light goes on for a while for unloading the laundry. Then it goes off to save energy; touch any button to switch it on again.

ACCESSORIES

Contact our After-Sales Service to check if the following accessories are available for your washing machine (and dryer) model

PEDESTAL
Can be installed beneath your washing machine, to raise the appliance and allow for a more comfortable laundry loading and unloading.

STACKING KIT SHELF
by which your dryer can be fixed on top of your washing machine to save space and to facilitate loading and unloading your dryer in the higher position.

HOW TO USE THE APPLIANCE

FIRST TIME USE

If you plug in the washing machine, it will switch on automatically. You will be asked to set the desired language for the display.
Turn the knob to select the desired language, then press the knob to confirm.

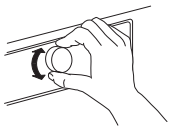

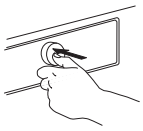

Afterwards you can adapt the water hardness setting of your washing machine to your regional water hardness. This is recommended in order to optimize the Dosing Aid function. Turn the knob to choose between soft / medium / hard and confirm by pressing the knob.

To remove any residues from the manufacturing process.

1. Select programme “Cotton” with temperature 95°C.

2. Add a small amount of detergent to the main wash compartment (II) of the detergent dispenser (maximum 1/3 of the quantity the detergent manufacturer recommends for lightly soiled laundry).

3. Start the programme without adding any laundry.
See section “DAILY USE” for more information on how to select and start a programme.

DAILY USE

SORTING YOUR LAUNDRY

1. REMOVE ALL OBJECTS FROM POCKETS



- Coins, pins etc. can damage your laundry as well as parts of the washing machine.
- Objects like paper handkerchiefs will tear into small pieces which must be removed manually after the wash.

2. CLOSE ZIP FASTENERS, BUTTONS OR HOOKS. TIE LOOSE BELTS OR RIBBONS TOGETHER.



- Wash small items (e.g. nylon stockings, belts etc.) and items with hooks (e.g. bras) in a laundry bag or pillow case with zip fastener. Always remove curtain rings, or wash curtains with the rings safely tied inside a cotton bag.

3. TYPE OF FABRIC / CARE LABEL SYMBOL

Cottons, mixed fibres, easy care / synthetics, wool, handwash items.

- Colour
  separate coloured and white items. Wash new coloured articles separately.
- Size
  Wash items of different sizes in the same wash load, to improve washing efficiency and distribution of the articles in the drum.
- Delicates
  Wash delicate items separately; they require gentle treatment.

HOW TO USE THE WASHING MACHINE

1. LOAD LAUNDRY



- Open the door and load the laundry. Load the articles one at a time loosely into the drum, without overfilling. Observe the load sizes given in the programme chart. Overloading the machine will result in unsatisfactory washing results and creased laundry.

2. CLOSE DOOR



- Make sure that no laundry gets stuck between door glass and rubber seal.
- Close the door so that you can hear it click shut.

3. OPEN WATER TAP



- Make sure that the washing machine is connected to the mains.
- Open the water tap.

4. SWITCH ON WASHING MACHINE



- Press the On/Off button until the programme button lights up. An animation will appear, and there will be a sound. Afterwards the washing machine is ready to be operated.
- The programme setting which you used last will appear on the control panel.

5. SET THE DESIRED PROGRAMME

GUIDED MODE

the button light will guide you through setting a programme in the following order: selection of programme / temperature / spin speed / options. As soon as you confirm a selection by pressing the knob, the button light will jump to the next step.

Select programme

Make sure that the programme button lights up. Turn the knob to select the desired programme. The indicator of the selected programme lights up, and the programme and its default duration appear on the display.
Confirm the desired programme by pressing the knob. The maximum possible laundry load for the selected programme is indicated on the display.

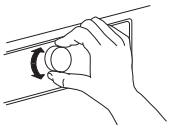

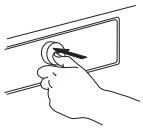

Find more information regarding programmes in section PROGRAMMES, OPTIONS AND FUNCTIONS and in the Daily Reference Guide.

Change temperature, if needed

If you want to change the temperature indicated on the display, make sure that the Temperature button lights up.
Turn the knob to select the desired temperature, then press the knob to confirm

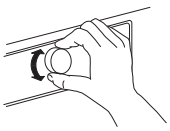

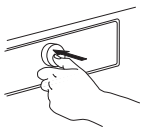

Change spin speed, if needed

If you want to change the spin speed indicated on the display, make sure that the Spin button lights up.
Turn the knob to select the desired spin speed, or Rinse hold, then press the knob to confirm.

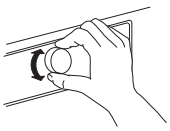

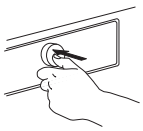

If you select spin speed “0”, the programme ends with draining the rinse water. No final spin cycle will be applied.
If you select “Rinse hold”, the programme will stop after the rinse phase. The laundry will remain immerged in the last rinse water. See more information in section **PROGRAMMES, OPTIONS AND FUNCTIONS / Rinse hold.**

Select options, if needed

If you want to select additional options, make sure that the options button lights up. The options which are selectable for your programme are indicated by lighting arrows. Turn the knob to select the desired options. The symbol of the selected optionblinks.
To confirm it, press the knob. The option symbol lights up solidly.

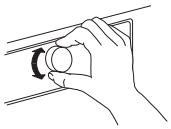

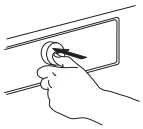

Some options / functions can be selected by directly pressing the button:



Refer to section **PROGRAMMES, OPTIONS AND FUNCTIONS** for more information.

INDIVIDUAL MODE

After you have switched on the washing machine, you are not forced to follow the **GUIDED MODE**. It is up to you which order you choose to set your programme. To do a setting, first press the relevant button, then turn the knob to select, and finally press the knob to confirm.
The range of temperatures, spin speeds and options depend on the programme selected. Therefore it is recommended to start your setting with selecting the programme.

6. ADD DETERGENT

- If you do **not** use the Dosing Aid function, pull out the detergent dispenser and add detergent (and additives/softener) now, as indicated in section **DETERGENT DISPENSER**. Observe the dosing recommendations on the detergent pack. If you have selected **PREWASH** or **START DELAY,** observe the instructions in section **PROGRAMMES, OPTIONS AND FUNCTIONS.** Afterwards carefully close the detergent dispenser again.
- If you use **the "Dosing Aid" function, add detergent later**, after you have started the programme. Refer to section **DOSING AID/DAILY USE.**

Correct dosing of detergent / additives is important, because

- it optimizes the cleaning result
- it avoids irritating residues of surplus detergent in your laundry
- it saves money by avoiding waste of surplus detergent
- it protects the washing machine by avoiding calcification of components
- it respects the environment by avoiding unnecessary environmental burden

7. START PROGRAMME

- Press and hold "Start/Pause" until the button lights up solidly; the programme will start.
- If you have selected **"Dosing Aid"**, the washing machine indicates the recommended detergent amount for your laundry load a short time after programme start. – Add your detergent to the main wash compartment of the detergent dispenser, or directly into the drum in a detergent ball.



- If you have selected **"Dosing Aid" and also "Prewash"**, the washing machine will alternately indicate you the recommended detergent amount for the Prewash (I) and the Main wash (II) compartment.



Add the recommended detergent amounts to the compartments and press "Start/Pause" to proceed with the programme.

- To avoid overflow, do not open the detergent dispenser during a running programme anymore.
- The remaining programme duration which is indicated on the display can vary. Factors like unbalance in the wash load, or foam formation, can have an effect on the programme duration. Whenever the remaining programme duration is calculated newly, an animation appears on the display.



8. CHANGE THE SETTINGS OF A RUNNING PROGRAMME, IF NEEDED

You can still change the settings while a programme is running. The changes will be applied, provided the respective programme phase has not finished yet.

- Press the relevant button (for example the "Spin speed" button to change the spin speed). The value will blink for a few seconds.
- While blinking, you can adjust the setting by turning the knob. If the value stopped blinking and you have not yet done the desired modification, press the button again.

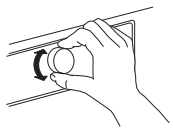

- Press the knob to confirm the modification. If you do not confirm, the modification will be confirmed automatically – the modified setting will stop blinking.

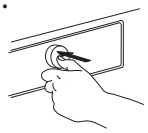

The programme will proceed automatically after you have changed the setting. To prevent that a running programme is changed by accident (for instance by children), use the "Key lock" (see paragraph **PROGRAMMES, OPTIONS AND FUNCTIONS).**

To change the settings of a running programme, you can also

- Press "Start/Pause" to put the running programme on pause
- Change your settings
- Press "Start/Pause" again to continue the programme.

If you have changed the programme, do not add detergent for the new programme.

9. PAUSE A RUNNING PROGRAMME AND OPEN THE DOOR, IF NEEDED

After programme start, the display indicates when the programme can still be paused to add garments.

- Press and hold "Start/Pause" to pause a running programme
- Provided water level or temperature is not too high, the "door open" indicator lights up. You can open the door, for example to add more laundry, or to remove laundry which was loaded by mistake.
- Press "Start/Pause" to proceed with the programme

10. RESET A RUNNING PROGRAMME, IF NEEDED

- Press and hold the "On/Off" button until the display indicates that the programme is cancelled. The water drains. The programme is ended, and the door unlocks.

11. SWITCH OFF THE WASHING MACHINE AFTER PROGRAMME END

- The display indicates that the cycle is finished, and the "Door open" indicator lights up – you can take out your laundry.
- Press "On/Off" to switch off the washing machine. If you do not switch it off, the washing machine will switch off automatically after about a quarter of an hour after programme end, to save energy.
- Leave the door ajar, so that the inside of the washing machine can dry.

PROGRAMMES AND OPTIONS

For choosing the appropriate programme for your kind of laundry, always respect the instructions on the care labels of the laundry.

PROGRAMME	*Type of Wash and Recommendations*	*Care Labels*	*Settings*
Eco Cotton	Normally soiled cotton laundry. At 40 °C and 60 °C standard cotton programme and most favourable programme in terms of combined water and energy consumption. Basis for the values indicated on the Energy Label.		MAX. LOAD **max** TEMPERATURE RANGE **Cold to 60°C** MAX SPIN SPEED **max** SELECTABLE OPTIONS **Intensive Rinse, Rapid, Colours 15°, Fresh Care**
COTTON	Normally to heavily soiled robust laundry made of cotton and linen, such as towels, underwear, table, bed linen etc.		MAX. LOAD **max** TEMPERATURE RANGE **Cold to 95°C** MAX SPIN SPEED **max** SELECTABLE OPTIONS **Prewash, Hot finish, Bio Stain 15°, Heavy soil, Intensive rinse, Rapid, Colours 15°, Fresh care**
MIXED	Lightly to normally soiled robust laundry made of cotton, linen, artificial fibres and their blends. Effective one-hour programme. Only wash similar colours together in one wash load.		MAX. LOAD **4.0 kg** TEMPERATURE RANGE **Cold to 60°C** MAX SPIN SPEED **max** SELECTABLE OPTIONS **Hot Finish, Bio Stain 15, Intensive Rinse, Rapid, Colours 15°, Fresh Care**
SYNTHETICS	Normally soiled laundry made of artificial fibres (like polyester, polyacrylics, viscose etc.) or their blends with cotton.		MAX. LOAD **3.0 kg** TEMPERATURE RANGE **Cold to 60°C** MAX SPIN SPEED **max** SELECTABLE OPTIONS **Prewash, Bio Stain 15, Heavy Soil, Intensive Rinse, Rapid, Colours 15°, Fresh Care**
DELICATES	Fine laundry made of delicate fabrics, which needs gentle treatment.		MAX. LOAD **1.5 kg** TEMPERATURE RANGE **Cold to 40°C** MAX SPIN SPEED **1000** SELECTABLE OPTIONS **Prewash, Rapid, Colours 15°, Fresh Care**

PROGRAMME	*Type of Wash and Recommendations*	*Care Labels*	*Settings*
WOOL	Woolens, labeled with the Woolmark and identified as machine washable, as well as textiles made of silk, linen, wool and viscose marked as handwashable. Respect the manufacturers recommendations on the care label.		MAX. LOAD **1.0 kg** TEMPERATURE RANGE **Cold to 40°C** MAX SPIN SPEED **1000** SELECTABLE OPTIONS **Rapid, Colours 15°, Fresh Care**
RAPID 30'	Lightly soiled laundry without stains, made of cotton and/or synthetics. Refresh programme.		MAX. LOAD **3.0 kg** TEMPERATURE RANGE **Cold to 30°C** MAX SPIN SPEED **max** SELECTABLE OPTIONS **Colours 15°, Fresh Care**
COLOURS	Lightly to normally soiled laundry made of cotton, synthetics or their blends; also delicates. Helps preserving the colours of your laundry. Take care to use detergent which is appropriate for the colours of your laundry load.		MAX. LOAD **4.0 kg** TEMPERATURE RANGE **Cold to 60°C** MAX SPIN SPEED **1000** SELECTABLE OPTIONS **Prewash, Bio Stain 15, Heavy Soil, Rapid, Colours 15°**
SPIN	Separate intensive spin programme. Suitable for robust laundry.		MAX. LOAD **max** TEMPERATURE RANGE **Cold** MAX SPIN SPEED **max** SELECTABLE OPTIONS **Fresh Care**
RINSE&SPIN	Separate rinse and intensive spin programme. Suitable for robust laundry.		MAX. LOAD **max** TEMPERATURE RANGE **Cold** MAX SPIN SPEED **max** SELECTABLE OPTIONS **Intensive Rinse, Fresh Care**
DRAIN	Separate programme to drain the water, without spinning. Can be selected if your laundry is in Rinse hold, and you want to drain the water without spinning the wet laundry. As an alternative to the Drain programme, you can select spin speed "0" to terminate the Rinse hold without spinning. Appropriate for delicate laundry like fine garments or curtains.		
SPECIAL PROGRAMMES	To set one of the following programmes, select and confirm the special programmes position. Then turn the knob to select one of the following eight programmes; the display indicates the programme name. Confirm the desired programme by pressing the knob.		

PROGRAMME	*Type of Wash and Recommendations*	*Care Labels*	*Settings*
SHIRTS	Shirts, blouses and fine business clothes made of cotton, synthetics or their blends. Provides gentle treatment for fine garments.	 	MAX. LOAD **1.5 kg** TEMPERATURE RANGE **Cold to 40°C** MAX SPIN SPEED **1000 rpm** SELECTABLE OPTIONS **Prewash, Colours 15°, Rapid, Fresh Care**
DUVET	Big items such as sleeping bags, washable blankets, bathmats, pillows and duvets filled with feathers or synthetic material. Adapted to wash and spin big laundry items. Respect the manufacturer's recommendations on the care label of the laundry	 	MAX. LOAD **3.0 kg** TEMPERATURE RANGE **Cold to 60°C** MAX SPIN SPEED **1000 rpm** SELECTABLE OPTIONS **Prewash,BioStain 15, Intensive rinse, Hot finish, Colours 15°, Rapid, Fresh Care**
BED LINEN	White or coloured bed linen made of cotton and synthetic fibers, or blends of both. Reduces microbes and gently cleans, also delicate bed linen. A thorough rinse phase helps to prevent detergent and pollen residues. Prefer powder detergent for this programme.	 	MAX. LOAD **3.5 kg** TEMPERATURE RANGE **Cold to 95°C** MAX SPIN SPEED **max** SELECTABLE OPTIONS **Prewash, BioStain 15, Intensive Rinse, Hot finish, Colours 15°, Rapid, Fresh Care**
CASHMERE	High-quality cashmere garments identified as machine washable or hand washable. Use liquid detergent for woolen laundry. Respect the manufacturer's recommendations on the care label of the laundry.		MAX. LOAD **1.0 kg** TEMPERATURE RANGE **Cold to 40°C** MAX SPIN SPEED **400 rpm** SELECTABLE OPTIONS **Colours 15°, Rapid, Fresh Care**
SPORT	Normally soiled and sweaty sportswear made of cotton jersey or microfibers. This programme includes a prewash cycle – you can add detergent also to the prewash chamber for washing soiled sports garments. Do not use softener; this can harm the elastane fibers often contained in sportswear.	 	MAX. LOAD **3.0 kg** TEMPERATURE RANGE **Cold to 40°C** MAX SPIN SPEED **max** SELECTABLE OPTIONS **Prewash, BioStain 15, Intensive Rinse, Colours 15°, Rapid, Fresh Care**

PROGRAMME	*Type of Wash and Recommendations*	*Care Labels*	*Settings*
JEANS	Normally soiled cotton jeans-wear and garments made of robust jeans-like material, such as trousers and jackets. For dark jeans-wear, use of special detergent for dark laundry recommended.		MAX. LOAD **4.0 kg** TEMPERATURE RANGE **Cold to 60°C** MAX SPIN SPEED **max** SELECTABLE OPTIONS **Prewash, BioStain 15, Heavy soil, Intensive Rinse, Hot finish, Colours 15°, Rapid, Fresh Care**
BABY ITEMS	Normally soiled baby clothes made of cotton and/or linen. The suds are rinsed out even more thoroughly, which helps to protect sensitive baby skin.		MAX. LOAD **4.0 kg** TEMPERATURE RANGE **Cold to 60°C** MAX SPIN SPEED **max** SELECTABLE OPTIONS **Intensive Rinse, Colours 15°, Rapid, Fresh Care**
MINI LOAD	Cotton and/or synthetic laundry made of stable fabric types. Ideal for washing a small laundry load in an economic way. Pre-treatment of stains recommended. Not appropriate for delicate laundry.		MAX. LOAD **1.0 kg** TEMPERATURE RANGE **Cold to 40°C** MAX SPIN SPEED **max** SELECTABLE OPTIONS **Intensive Rinse, Colours 15°, Rapid, Fresh Care**

OPTIONS SELECTABLE BY THE OPTIONS BUTTON

The programme chart gives an overview of possible combinations of programmes and options. Not all combinations of programmes and options are selectable. Also certain options are not combinable. In this case, the indicator of the non-combinable option blinks and switches off again, and a signal sounds.

PREWASH

Adds a prewash phase to the wash programme selected.
For heavily soiled laundry (e.g. with sand or granular dirt). – Shake out the laundry thoroughly before loading it into the drum.

You can add a small amount of detergent also to the prewash compartment of the detergent dispenser, or directly into the drum.

– When selecting “Prewash”, use powder detergent for the main wash, to ensure that the detergent stays in the detergent dispenser until start of the main wash phase. Respect the detergent manufacturer’s dosing recommendations, or use the “Dosing Aid” option.
Prolongs the programme by about 20 minutes.

HOT FINISH

The rinse phase completes with a warm rinse, which relaxes the fabric fibres and passes into a gentle and shorter spin phase.

The laundry feels comfortably warm when taking it out shortly after programme end.

BIO STAINS 15°

15°

Helps to remove all kinds of stains, except grease/oil.
The programme begins with a cold water wash phase. Duration is prolonged by about 10 minutes.

Pre-treatment recommended for obstinate stains.
Not selectable for Cotton 95°C

HEAVY SOIL



Helps to clean heavily soiled, stained laundry by optimizing the efficiency of additives for stain removal.
Add an appropriate amount of in-wash additive for stain removal (powder) to the main wash compartment, together with your detergent. Only use powder detergent with this option.
Respect the manufacturer's dosing instructions.

May prolong the programme by up to 15 minutes.
IMPORTANT: Appropriate for use of stain removers and bleaches on oxygen basis.
Chlorine or perborate bleaches must not be used!

INTENSIVE RINSE



Helps to avoid detergent residues in the laundry by a prolonged rinse phase.
Particularly suitable for washing baby laundry, for people suffering from allergies and for areas with soft water.

RAPID



Enables quicker washing. Shortens the programme duration while keeping a good wash result.
Recommendable for only lightly soiled laundry.
Not selectable for Cotton 95 °C.

OPTIONS WHICH ARE DIRECTLY SELECTABLE BY PRESSING THE RESPECTIVE BUTTON

COLOURS 15°



Helps to preserve the colours of your laundry by washing it with cold water (15°C). Saves energy for water heating, while keeping a good wash result.

Suitable for lightly soiled coloured laundry without stains.

Make sure that your detergent can be used with cold wash temperatures (15 or 20 °C).

Not selectable for Cotton 95°C.

FRESH CARE



Helps to keep your laundry fresh if you cannot unload it soon after programme end.

The washing machine starts to tumble the laundry periodically a few minutes after programme end. This tumbling will last up to approximately 6 hours after end of your wash programme. You can stop it at any time by pressing any button; the door unlocks and you can take out your laundry.

TEMPERATURE

°C

If you want to change the temperature, press the temperature button, turn the knob to select the desired temperature and confirm it by pressing the knob.

If you switch on the washing machine, the last used programme and temperature setting will appear on the control panel.
If you change the programme, the default temperature of the selected programme will appear on the display.

SPIN



If you want to change the spin speed, press the Spin button, turn the knob to select the desired spin speed and press the knob to confirm.
If you select spin speed “0”, the rinse water will be drained at the end of the programme, and there will be no final spin cycle.

If you switch on the washing machine, the last used programme and spin speed setting will appear on the control panel.
If you change the programme, the default spin speed of the selected programme will appear on the display.

RINSE HOLD



To avoid automatic spinning of the laundry at the end of the programme. The laundry remains in the last rinse water, the programme does not proceed. The display indicates when the washing machine has reached the rinse hold.
Suitable for delicate laundry which is not appropriate for spinning, or which should be spun with a lower spin speed.
Not appropriate for silk.
To terminate the “Rinse hold”, choose between:

- draining the water, no spinning: turn the knob to select spin speed “0”, then press “Start/Pause”: the water will be drained and the programme ended

- spinning the laundry: the default spin speed blinks - start the spin cycle by pressing “Start/Pause”. Or select a different spin speed by turning the knob, press it to confirm, and press Start/Pause” to start the spin cycle

FUNCTIONS

ON/OFF

To switch on the washing machine: press the button until the Start/Pause button lights up.

To cancel a running programme: press and hold the button until the display indicates that the programme is cancelled; the washing machine will perform a drain cycle to end the program.

To switch off the washing machine after programme end: press the key until the lights go off.

KNOB

- To select and confirm programmes and options
- Turn to select

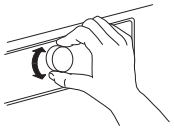

- Push to confirm

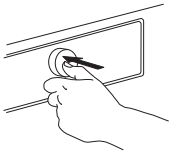

START/PAUSE

- To start the programme, after you have finished your settings
- To pause a running programme
- To continue a paused programme

KEY LOCK

3 sec

This function allows you to lock the buttons and the knob of the control panel against unwanted operation, for example by small children.

The washing machine must be switched on.

Press and hold the option button for at least 3 seconds;

the display indicates that the keys are locked.

Knob and buttons are locked now. The only working function is "On/Off" to switch the washing machine off. – The key lock will remain active also if you switch off and on again the washing machine.

To unlock the buttons/knob, press and hold the option button again for at least 3 seconds, until the display indicates that the keys are unlocked.

DOSING AID



See separate section Dosing Aid – first use / daily use.

FINISH IN



Moves the end of your programme to a later time. Helps to profit from more favourable energy rates (for example during the night), or to have the laundry ready at a certain time. Do not use liquid detergent with this function.

Choose a delay up to 23:30 hours.

- Select programme, temperature and options.
- Press the "Finish in" button – the symbol over the button blinks.



- Turn the knob to select a delay up to 23:30 hours, which will be shown on the display. Confirm the desired delay by pressing the knob. The symbol over the finish in button lights up solidly.

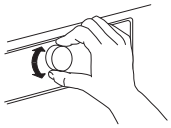

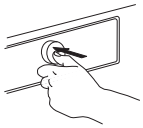

- When you have finished your settings, press "Start / Pause" – the light over the button lights up solidly. The display shows the countdown of the time until end of the programme. The door locks.



- After the delay phase, the programme starts automatically. The display then indicates the remaining programme duration.

To cancel the delay

- either press "Start/Pause" to cancel the delay; to start the selected programme immediately, press "Start/Pause" again
- or press and hold "On/Off" to cancel the complete programme setting.

SETTINGS



The following settings can be changed:
Language (= display language) / key tones / cycle end alert / display contrast / water hardness / dosing aid (adjust dosing amounts for the detergents you use) / eco mode (automatic switch-off function after programme end) / factory settings (= return to factory settings).

- Press and hold the Programme button for at least 3 seconds.
- Turn the knob to select the setting which you want to change; it appears on the display. Confirm it by pressing the knob.
- Turn the knob to adjust the setting; confirm by pressing the knob.
- To exit the Settings mode, either turn the knob until the display indicates that you can exit – then confirm by pressing the knob. Or alternatively press the Programme button.

INDICATORS

	**DOOR CAN BE OPENED**	This indicator will light • before you have started a programme • when you have paused a programme and the water level is not too high, or the laundry is not too hot in that programme phase • when a programme is finished and the laundry can be unloaded
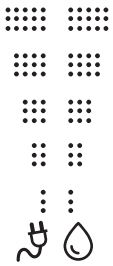	**ENERGY / WATER MONITOR**	Gives feedback about the energy and water consumption of your programme setting. The less indicators light up, the more economic is your programme setting. Can still adapt after sensing phase of laundry load.
	DESCALING	A display message will remind you regularly to descale the washing machine. Find descaler appropriate for the washing machine (WPRO) on wpro.eu To cancel the display reminder, press the knob.
	FAILURE:	Refer to the Troubleshooting section for more information.

DOSING AID / FIRST USE

The concentration of detergents available on the market differs considerably. For that reason, adapt the washing machine to the dosing amounts of the detergents which you use.

Furthermore, check if the washing machine's preset water hardness level (soft) corresponds to your local water hardness level – if not adapt it (see "DOSING AID / FIRST USE").

SAVE THE DOSING VALUES FOR THE DETERGENTS YOU USE

Detergent types:	Coloured detergent	Delicate detergent	Generic detergent
			
Programmes:	Colours	Wool Delicates Cashmere Shirts	All other programmes

Check on the packs of your detergents the dosing amount for medium soil level and medium water hardness

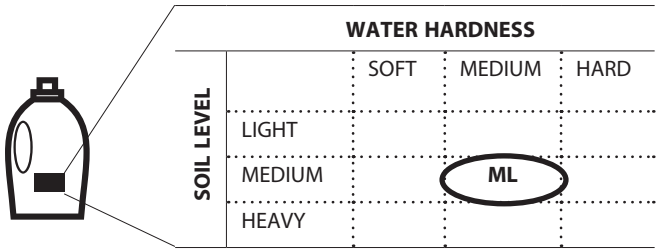

1. Press and hold the Programme button to enter into the settings mode.

2. Select DOSING AID by turning and pressing the knob.

3. Select the detergent group for which you want to save the dosing value; chose between:
- Coloured detergent
- Generic detergent
- Delicate detergent by turning and pressing the knob.

4. Select and confirm the dosing value, which you have identified before on the detergent pack, by turning and pressing the knob.

5. Select EXIT to exit the settings mode by turning and pressing the knob.

Do this procedure for all 3 programme groups.

ADAPT THE WASHING MACHINE TO YOUR LOCAL WATER HARDNESS

The washing machine comes with preset water hardness level soft. Check your regional water hardness level, for example by consulting your local authorities or via internet. – If your local water hardness is not soft, adjust the washing machine as follows:

1. Press and hold the Programme button to enter into the settings mode.

2. Select WATER HARDNESS by turning and pressing the knob.

3. Select the relevant water hardness level (soft, medium or hard) by turning and pressing the knob.

4. Select EXIT to exit the settings mode by turning and pressing the knob.

DOSING AID / DAILY USE

1. After you have loaded the laundry, closed the door and selected programme and options, press the “Dosing Aid” button. The Dosing Aid button lights up.



2. Start the programme by pressing "Start/ Pause". – The drum rotates to detect the laundry load; the display indicates the load sensing phase. On the control panel, an animation occurs. Afterwards the recommended detergent amount for the main wash compartment in ml appears on the display.





If you have selected Prewash option, the display alternately shows the amount for prewash (I) and main wash (II) compartment.





3. Pull out the detergent dispenser and pour the recommended detergent quantity into the main wash (II) and, if Prewash is selected, also into the prewash (I) compartment of the detergent dispenser. Instead of adding the detergent to the detergent dispenser, it can also be added directly into the drum, in a detergent ball.
If Prewash is selected: prewash detergent can be added into the drum, main wash detergent must be added to the main wash compartment of the detergent dispenser. Use powder detergent for the main wash in this case, to ensure that it stays in the detergent dispenser until start of the main wash phase.



4. Close the detergent dispenser (or the door) and press “Start/Pause” to continue the programme.



SAVING TIPS

- Achieve the best use of energy, water, detergent and time by using the recommended maximum load size for the programmes, as indicated in the programme chart.
- Do not exceed the detergent dosages indicated in the detergents manufacturer's instructions. Use the Dosing Aid function; prepare this function as indicated in "First use of the Dosing Aid function".
- Use "Prewash" for heavily soiled laundry only.
- Pre-treat stains with stain remover or soak dried in stains in water before washing to reduce the necessity of a hot wash programme.
- Save energy by using a 60°C instead of a 95°C wash programme or a 40°C instead of a 60°C wash programme. For cotton laundry, prefer using programme Eco Cotton with 40°C or 60°C.
- Save energy and time by selecting a high spin speed to reduce the water content in laundry before using a tumble dryer.
- Use option Colours 15° for lightly soiled coloured laundry; it saves energy for water heating.

CLEANING & MAINTENANCE

⚠ WARNING

For any cleaning and maintenance, switch off and unplug the washing machine.
Do not use flammable fluids to clean the washing machine.

CLEANING THE OUTSIDE OF THE WASHING MACHINE

Use a soft damp cloth to clean the outer parts of the washing machine.



Do not use glass or general purpose cleaners, scouring powder or similar to clean the control panel – these substances might damage the printing.

CHECKING THE WATER SUPPLY HOSE

Check the inlet hose regularly for brittleness and cracks. If damaged, replace it by a new hose available through our After-Sales Service or your specialist dealer.
Depending on the hose type:

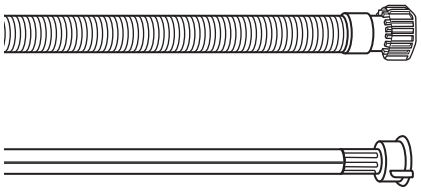

If the inlet hose has a transparent coating, periodically check if the colour intensifies locally. If yes, the hose may have a leak and should be replaced.

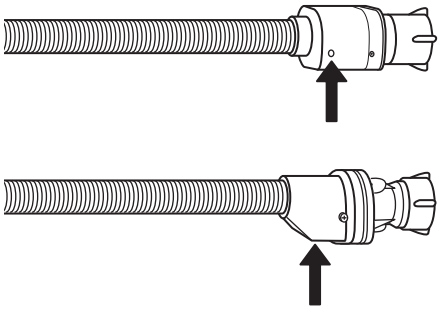

For water stop hoses: check the small safety valve inspection window (see arrow). If it is red, the water stop function was triggered, and the hose must be replaced by a new one.
For unscrewing this hose, press the release button (if available) while unscrewing the hose.

CLEANING THE MESH FILTERS IN THE WATER SUPPLY HOSE

1. Close water tap and screw off the inlet hose.

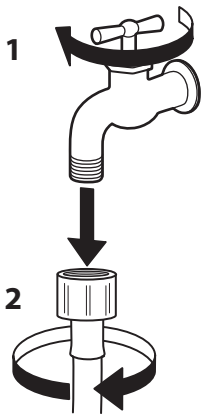

2. Clean the mesh filter at the hose's end carefully with a fine brush.

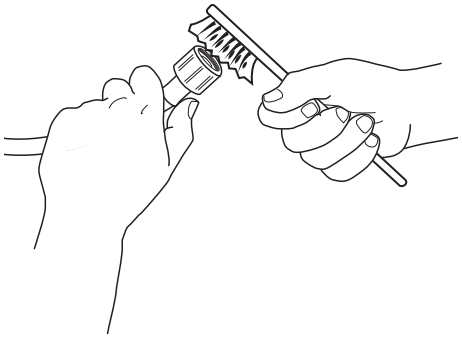

3. Now unscrew the inlet hose on the back of the washing machine by hand.
Pull out the mesh filter from the valve on the back of the washing machine with pliers and carefully clean it.

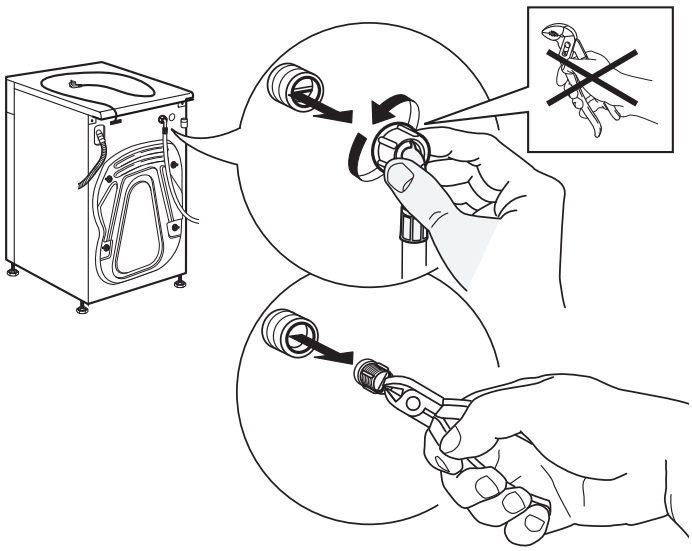

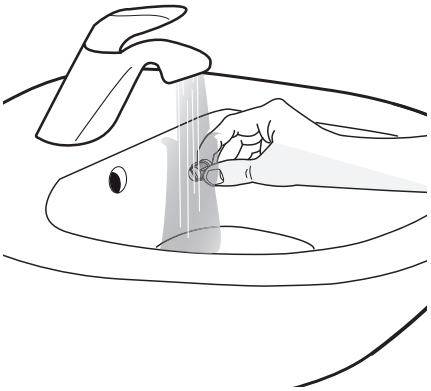

4. Insert the mesh filter again. Connect the inlet hose to water tap and washing machine again. Do not use a tool to connect the inlet hose. Open the water tap and check that all connections are tight.

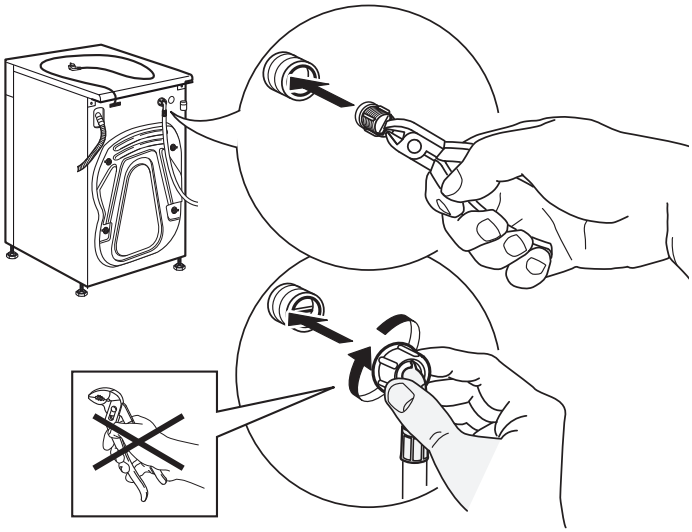

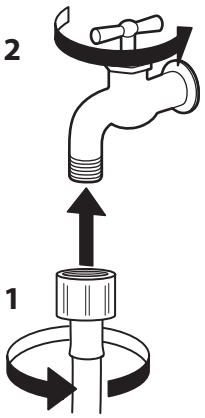

Bauknecht
Mehr als Technik

CLEANING THE DETERGENT DISPENSER

1. Remove the detergent dispenser by pressing on the release button and at the same time pulling out the detergent dispenser.

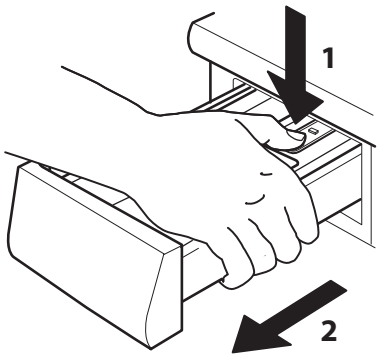

2. Remove the insert from the detergent dispenser, as well as the insert of the softener compartment.

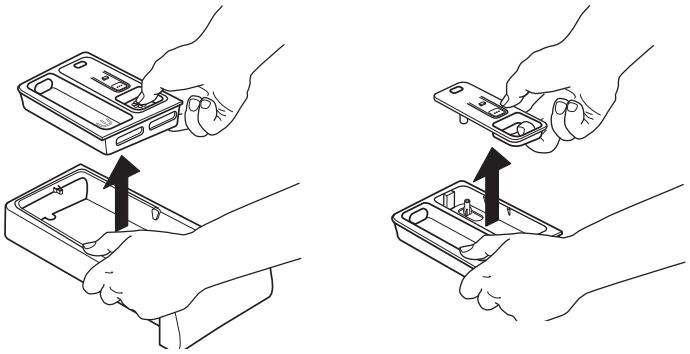

3. Clean all parts under running water, removing all detergent or softener residues.

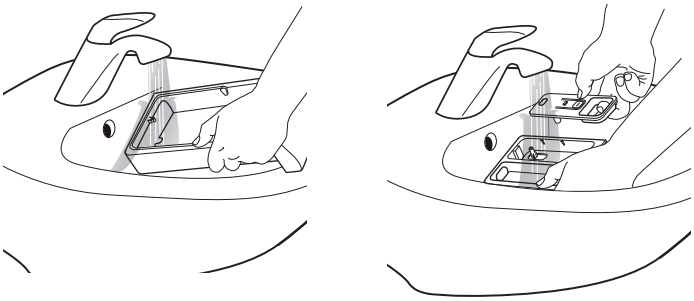

4. Wipe the parts dry with a soft cloth.

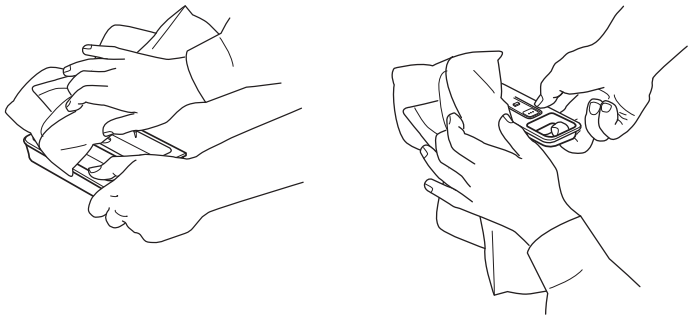

5. Reinstall the detergent dispenser and push it back into the detergent compartment.

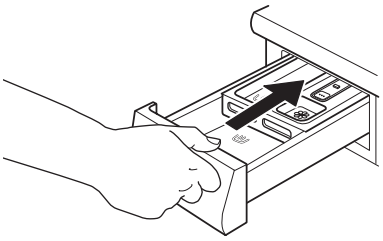

Bauknecht
Mehr als Technik

CLEANING THE WATER FILTER / DRAINING RESIDUAL WATER

⚠ WARNING

Switch off and unplug the washing machine before cleaning the water filter or draining residual water. If you used a hot wash programme, wait until the water has cooled down before draining any water.

Clean the water filter regularly, to avoid that the water cannot drain after the wash due to obstruction of the filter.
If the water cannot drain, the display indicates that the water filter may be clogged.

1. Remove the plinth: Push the tabs left and right to release the plinth and remove it.

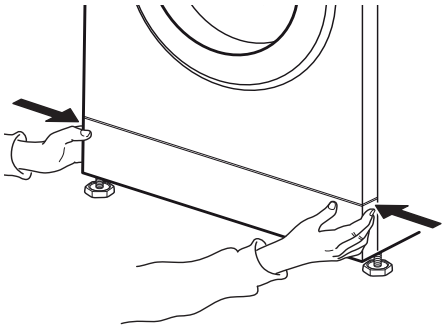

2. Container for drain water:
If your washing machine model has an emergency drain hose:
Provide a flat container for the drain water. Remove the emergency drain hose from the base of the washing machine.

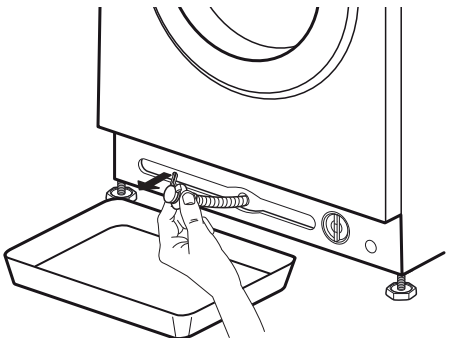

If your washing machine model has no emergency drain hose:

Place a broad, flat container beneath the water filter, to collect the drain water.

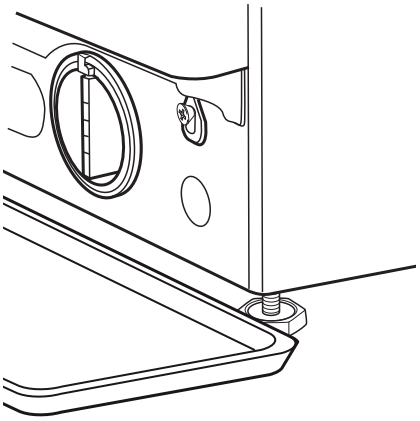

3. Drain the water:
If your washing machine model has an emergency drain hose:
Remove the stopper at the end of the hose and let the water flow into the container. When the container is full with water, plug the stopper to the hose end and empty the container. Repeat this procedure until no more water flows out. Afterwards firmly close the emergency drain hose with the stopper and reinsert the hose in the washing machine's base.

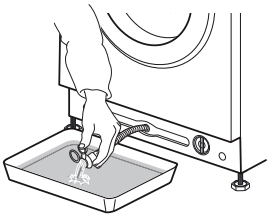

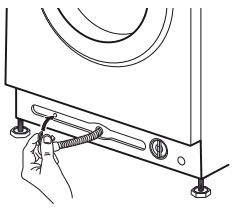

If your washing machine model has no emergency drain hose:
Slowly turn the filter counterclockwise until water flows out. Let the water flow out, without removing the filter.
When the container is full, close the water filter by turning it in clockwise. Empty the container. Repeat this procedure until all the water has drained.

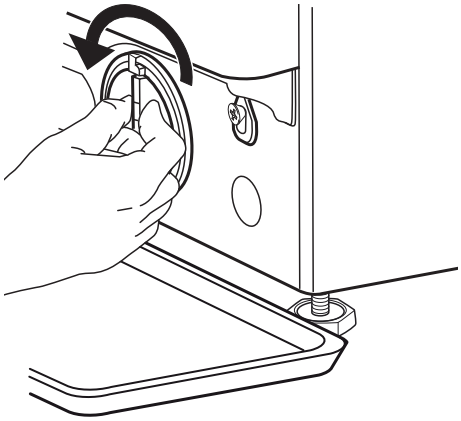

4. Remove filter: Lay a cotton cloth beneath the water filter, which can absorb a small amount of rest water. Then remove the water filter by turning it out anticlockwise.

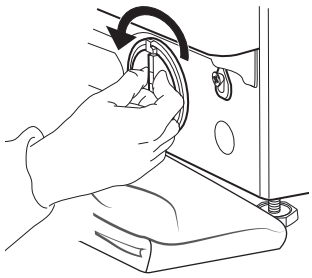

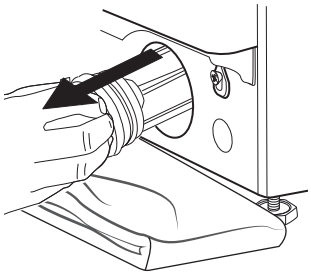

5. Clean the water filter: remove residues in the filter and clean it under running water.

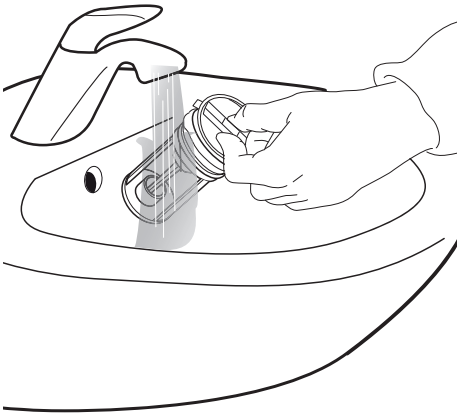

6. Insert the water filter and reinstall the plinth: Reinsert the water filter again by turning it in clockwise direction. Make sure to turn it in as far as it goes; the filter handle must be in vertical position. To test water tightness of the water filter, you can pour about 1 liter of water into the detergent dispenser.
Then reinstall the plinth.

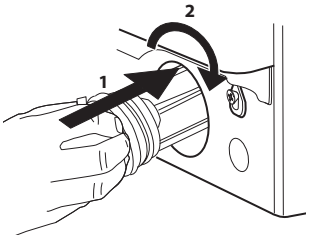

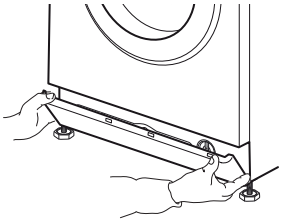

TRANSPORT AND HANDLING

⚠ WARNING

Never lift the washing machine by holding it at the worktop.

1. Pull out the mains plug, and close the water tap.

2. Make sure that door and detergent dispenser are properly closed.

3. Disconnect the inlet hose from the water tap, and remove the drain hose from your draining point. Remove all rest water from the hoses, and fix them so that they cannot get damaged during transport.

4. Refit the transport bolts. Follow the instructions for removing the transport bolts in the Installation Guide in reverse order.

Important: Do not transport the washing machine without having fixed the transport bolts.

TROUBLESHOOTING

Your washing machine is equipped with various automatic safety and feedback functions. They enable failures and needed maintenance to be detected and indicated accordingly.

These failures are frequently so minor that they can be removed within a few minutes.

PROBLEM	POSSIBLE CAUSE	SOLUTION
Washing machine does not start, no indicators are on	Not connected to mains	Insert plug into socket
	Socket or fuse does not function	Test function with a lamp, have faulty part repaired
	Power breakdown	The washing machine will automatically continue when power is available again
Washing machine does not start, although “Start/Pause” has been pressed	Door not properly closed	Push door to close it until it clicks shut
	Key lock is activated	Press the button with the key symbol at least 3 seconds to deactivate the key lock
Washing machine stops during the programme, and “Start/Pause” blinks	Rinse hold (= positon of spin button) is activated	Terminate Rinse hold with draining the water or spinning the laundry (see “Rinse hold” – FUNCTIONS AND OPTIONS).
	Programme was interrupted, maybe door has been opened	Make sure door is closed Press “Start/Pause” to proceed with the programme
	Safety system has been activated: failure indicator lights up and/or display shows failure (F…); water tap might be closed	Refer to paragraph “Failure indicators”. Make sure that water tap is open and inlet hose has no kinks.
Detergent dispenser contains detergent residues after programme end	Inlet water pressure too low; mesh filter of the water supply hose may be blocked	Make sure water tap is properly opened. Check mesh filters of inlet hose, see CLEANING AND MAINTENANCE / Cleaning the mesh filters of the inlet hose
Washing machine vibrates during spinning	Transport bolts have not been removed (!)	Remove transport bolts according to the instructions in the INSTALLATION GUIDE
	Washing machine not standing level on all four feet	Adjust feet (INSTALLATION GUIDE). Make sure that washing machine stands on level and firm underground.
Spin speed “0” blinks on control panel and/or laundry still very wet	Unbalance of laundry load prevented spin cycle, to protect the washing machine	If you want to spin the wet laundry, add more laundry items of different sizes and start “Rinse&Spin” programme. Avoid small laundry loads consisting of few big, absorbent pieces of laundry / wash different sizes of articles in one load

PROBLEM	POSSIBLE CAUSE	SOLUTION
Spin result poor	Spin button was set to a low spin speed.	Select and start “Spin” programme with a higher spin speed (if selectable).
	Unbalance during spinning prevented final spin cycle.	See line above.
	Excessive foam formation prevented spinning.	Start “Rinse&Spin” programme. Avoid excessive detergent dosing. Adjust and use the Dosing Aid function.
Detergent residues on laundry after wash	Too much powder detergent used / quality of detergent.	Avoid detergent overdosing Brush out the fabric. Use “Intensive Rinse” option (if selectable). Use liquid detergent / use special detergent for black or dark laundry.
Washing machine stands still during programme / programme seems not to proceed / during standstill, animation may appear on display	Programme phases without drum movement.	Standstill phases lasting up to about 2 minutes are normal in some wash programmes.
	Excessive foam formation (maybe by overdosage of detergent) interrupted the programme. Can be repeated several times until the foam reduction is sufficient.	The programme continues automatically, as soon as the foam reduction is sufficient. If display shows Fod (=failure overdosage), refer to table FAILURE INDICATORS AND MESSAGES.
	Under- or overvoltage of mains might be detected.	Programme will automatically continue as soon as the mains voltage is in the proper range.
Programme duration is longer or shorter as initially indicated on the display / in the programme chart.	Washing machine adapts to factors having an effect on duration, such as size of laundry load, excessive foam formation, load unbalance, prolonged heating time due to low inlet water temperature etc.. When programme duration is recalculated, an animation appears on the display.	Avoid small laundry loads with absorbent, big pieces of laundry / add articles of different sizes. Avoid detergent overdosing – respect the dosing recommendations of the detergent manufacturer. Adjust and use the Dosing Aid function.
Door is locked, with or without failure indication, and the programme does not run.	Door is locked in case of power breakdown.	Programme will continue automatically as soon as the mains is available again.
	Washing machine is in a standstill (as described in previous section “Washing machine stands still…).	Programme will continue automatically after the origin of the standstill does not persist anymore.
	Water level or temperature too high, or electrical component failure.	See instructions for failure “Service”: doorlock failure” / FdL / F29 in section Failure indicators.
Drum light (if available) does not work anymore.	Light bulb needs to be replaced.	Call our After-Sales Service to exchange the light bulb.

FAILURE INDICATORS AND MESSAGES

Below is a summary of possible failure causes and solutions.
If the problem persists after having removed the origin of the failure, press On/Off for at least three seconds. If afterwards the failure indication still persists, close the water tap, switch off and unplug the washing machine and contact our After-Sales Service.

Failure Indicator lights up	Display message	Possible Cause	Possible Solution
	Open water tap	No or not sufficient water supply • Water tap closed • Kinks in inlet hose • Water tap pressure too low • Mesh filters in inlet hose clogged • Water inlet hose frozen up	Open water tap Make sure there are no kinks in the inlet hose. Make sure water pressure is sufficient Clean mesh filters in inlet hose (CLEANING AND MAINTENANCE). Install washing machine at an ambient temperature of at least 5°C. After problem has been removed, press Start/Pause. If problem persists, press On/Off for at least 3 seconds.
	Water filter clogged	Waste water is not pumped out • Kinks in drain hose • Drain hose blocked or frozen up • Filter blocked • Pump blocked	Check drain hose for kinks. Install washing machine at an ambient temperature of at least 5°C Clean water filter as described in section CLEANING THE FILTER. After problem has been removed, press Start/Pause. If problem persists, press On/Off for at least 3 seconds.
	Over foaming	Excessive foam formation (maybe by overdosage of detergent) interrupted the programme. The interruption can be repeated several times until the foam reduction is sufficient.	Start “Rinse&Spin” programme, with option Intensive Rinse. Respect the dosing recommendations by the detergent manufacturer. Adjust and use the Dosing Aid function. Make sure that the water filter is clean.
	Load unbalance Spin speed “0” blinks	Unbalance in laundry load prevented spin cycle, to protect washing machine	If you want to spin the wet laundry, add more laundry items of different sizes and start “Rinse&Spin”. Avoid small laundry loads consisting of few big, absorbent pieces of laundry. Wash different sizes of articles in one load.

Indication on control panel	*Possible Cause*	*Possible Solution*
 *Door open indicator blinks*	*The door cannot lock*	*Firmly press the door in area of door lock, to properly close it. Then press Start/Pause. If the problem persists, press On/Off for at least 3 seconds.*

Failure indicator lights up	*Display message*	*Possible Cause*	*Possible Solution*
	FdL (or F29)	The door cannot unlock.	Firmly press the door on the area of the door lock, then press On/Off for at least 3 seconds. If hot cycle is selected, wait until cool down and press again On/Off for at least 3 seconds. Switch on the washing machine. If failure still appears, check and eventually remove possible cause as indicated for failure “Clean filter”. Then switch the washing machine on again. If door does not unlock, press On/Off for at least 3 seconds. If door still does not unlock, refer to section “DOOR – HOW TO OPEN IT IN CASE OF A FAILURE”. Before draining water / opening the door, wait until the water has cooled down (for hot wash programmes).
	Call Service F24	Too much laundry for a programme with small maximum load	Select and start programme “Rinse and Spin” to complete the interrupted wash programme. Do not overload the washing machine. Respect the maximum load size of the programmes indicated in the Programme Chart.
		Too much inlet water	Turn off the water tap. Press On/Off for at least 3 seconds to drain the water; wait until the drain phase has ended (End will appear on display). Turn on the water tap again. – If water immediately flows into the washing machine (without having started a programme), there is a failure of an electrical component. Close water tap, switch off and unplug the washing machine. Contact our After-Sales Service.
	Call Service F02	Water stop failure – water leakage detected in bottom tray.	Press Start/Pause. If problem persists, press On/Off for at least 3 seconds. If failure persists, contact After-Sales Service.
	Call Service F04 to F99	Failure of an electrical component	Press On/Off button for at least 3 seconds to reset the failure. If problem persists, switch off washing machine, close the water tap and unplug it; call After-Sales Service.

DOOR – HOW TO OPEN IT IN CASE OF A FAILURE, TO TAKE OUT YOUR LAUNDRY

Switch off the washing machine and unplug it.
Close the water tap.
Wait until the drum has stopped rotating.
Never open the door while the drum is in motion.
Wait until water and laundry have cooled down when washing with high temperatures.
Always drain the water before opening the door, either by pressing and holding On/Off until "rES" appears on the display, or by doing it manually as described in section DRAINING RESIDUAL WATER.

Before opening the door as described in below section, refer to failure “Door is locked with or without failure indication, and the programme does not run”. The door may unlock by itself after conditions like for example a power breakdown do not persist anymore.
If you want to take out your laundry immediately, first try to unlock the door as described in FAILURE INDICATORS AND MESSAGES (FdL or F29). Only if the door cannot be opened as described in the section mentioned before, proceed as described below.
In case of a power breakdown, the washing machine will proceed where it was interrupted as soon as power is available again.
If a failure occurs on the washing machine and the door is locked, but you must take out your laundry:

1. First drain the residual water, as described in section “Draining residual water”

2. Remove the screw with a screwdriver.

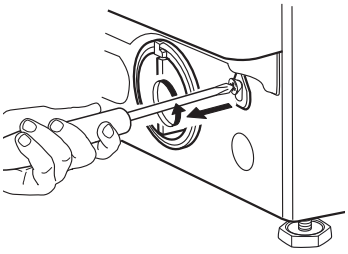

3. Then pull downwards the strap marked with “Door open”. You can now open the door and take out your laundry.

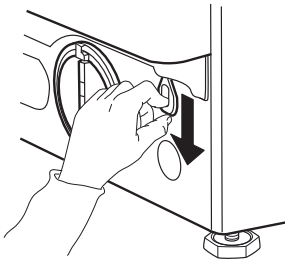

4. Afterwards fix the strap again by firmly turning in the screw with the screwdriver.

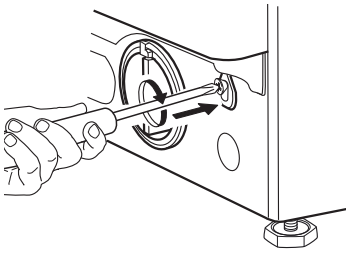

5. Reinstall the plinth

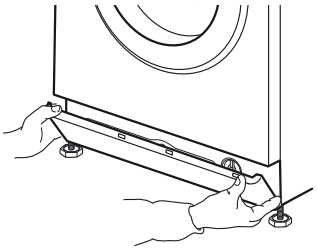

AFTER-SALES SERVICE

BEFORE CALLING THE AFTER SALES SERVICE

1. Check if you can solve the problem yourself by consulting section **TROUBLESHOOTING GUIDE.**

2. Switch the washing machine off and on again to see if the failure persists.

IF AFTERWARDS THE FAILURE STILL OCCURS, CONTACT THE AFTER SALES SERVICE

Call the number shown on the warranty booklet, or follow the instructions on **website www.bauknecht.eu**

Always indicate
- A brief description of the failure
- Washing machine model (see rating plate inside door)
- Service number (on service sticker inside door; number after "Service")
- Your full address and telephone number.



For any repairs, use our authorized After Sales Service, to ensure proper repairing and use of original spare parts.

Manufacturer:
Whirlpool Europe s.r.l. - Socio Unico
Viale Guido Borghi 27
21025 Comerio (VA)
Italy

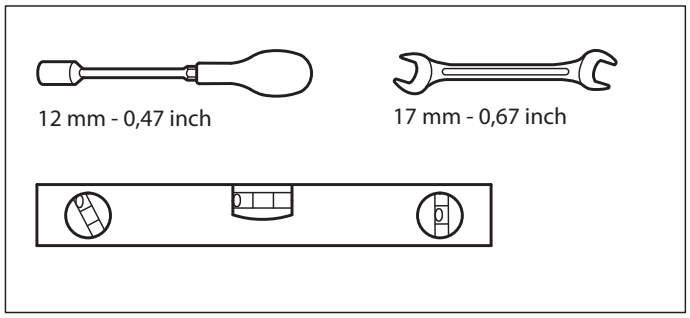

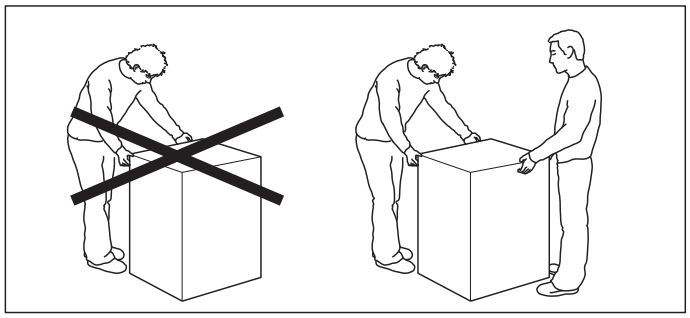

1.

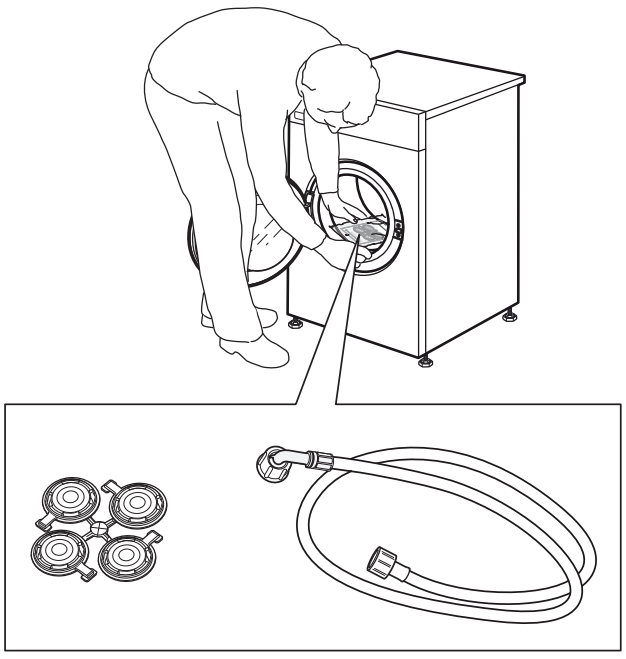

2.

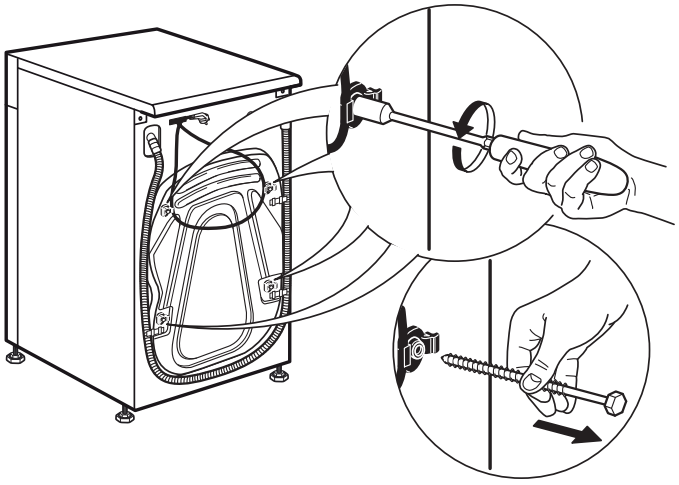

3.

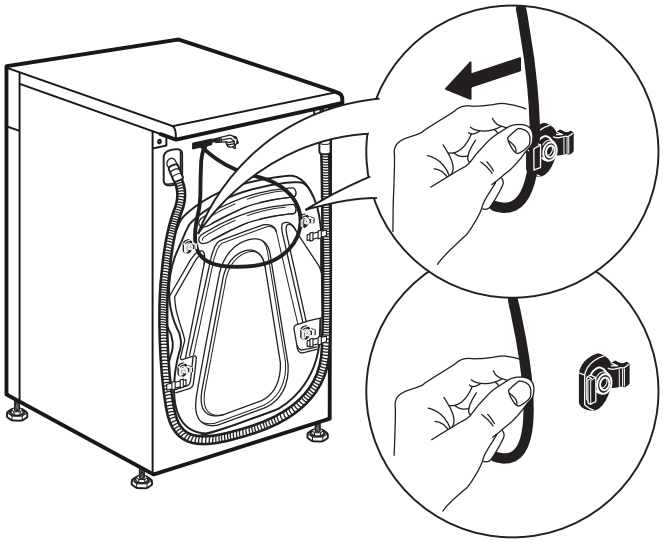

4.

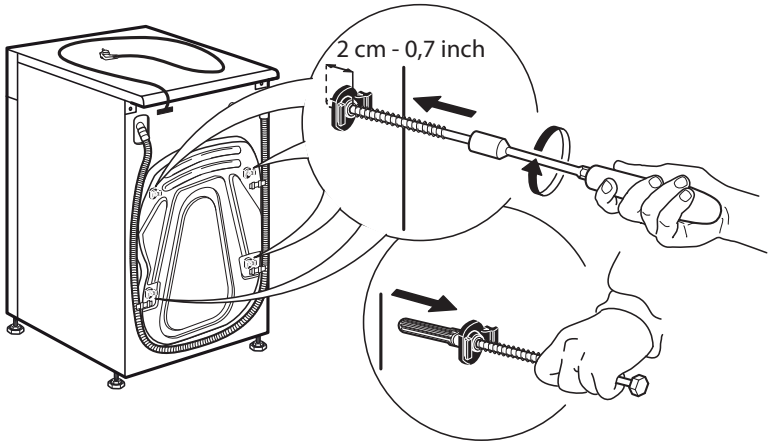

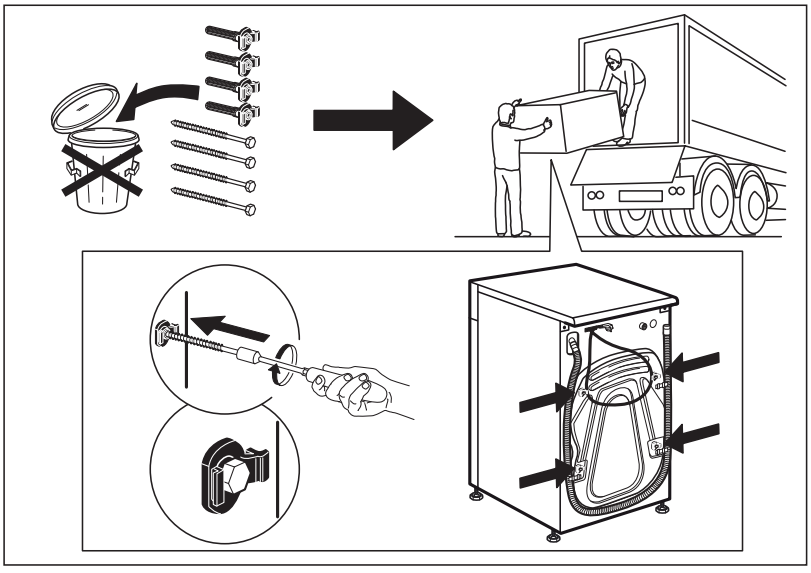

5.

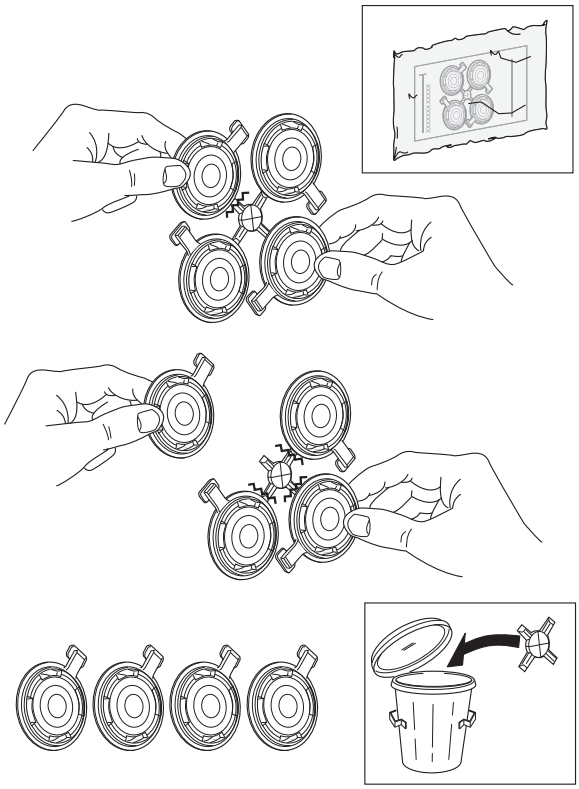

6.

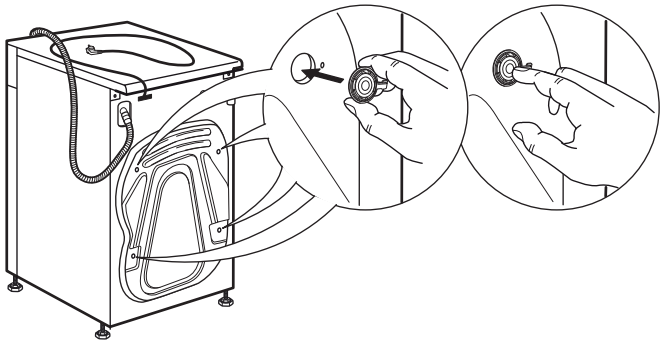

7.

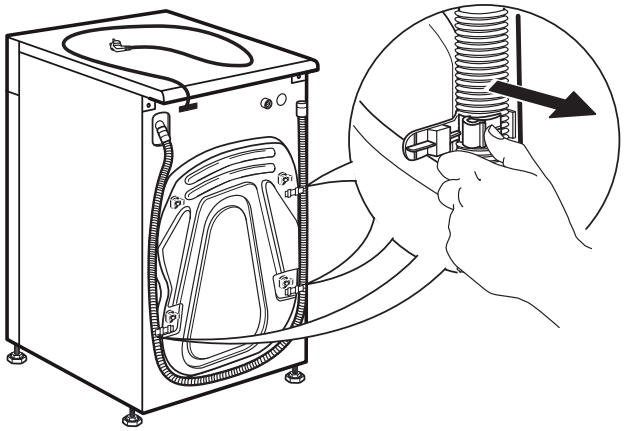

Bauknecht
Mehr als Technik

8.

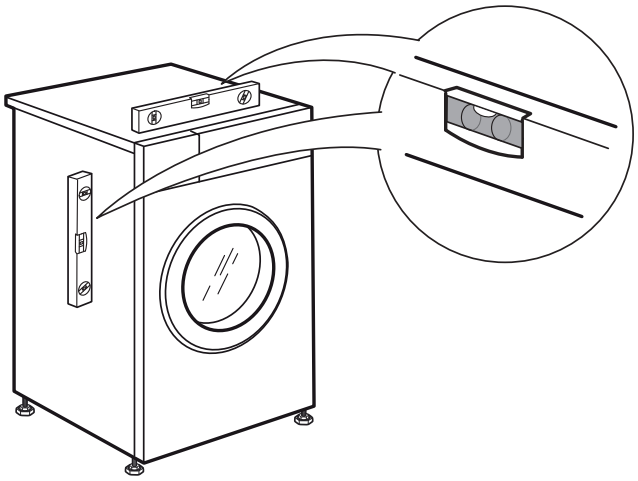

9.

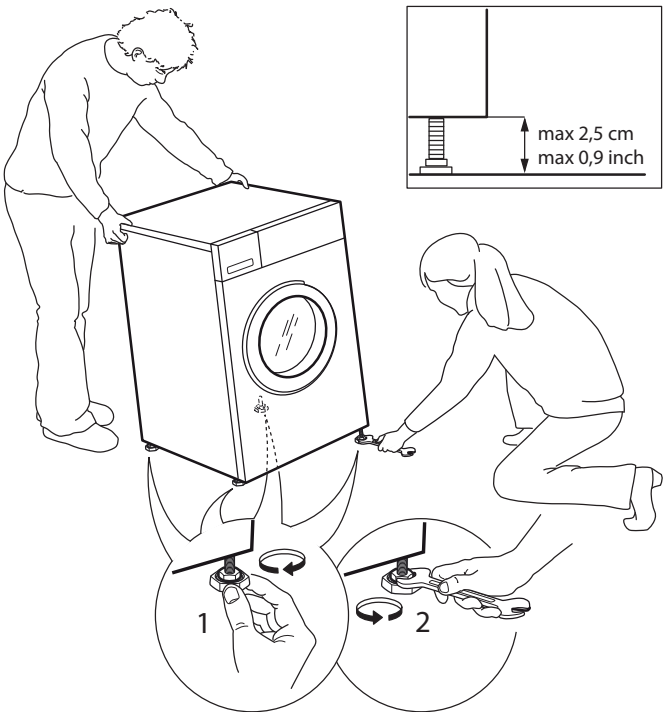

10.

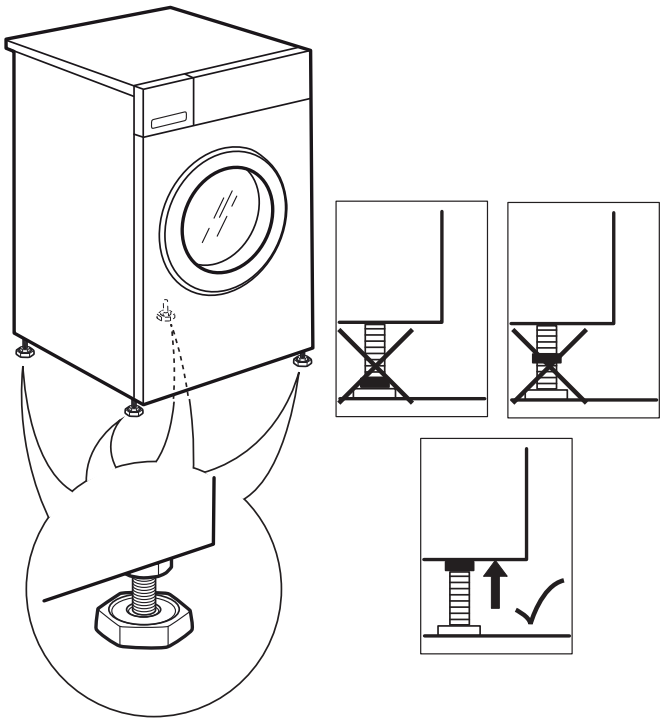

Bauknecht
Mehr als Technik

11.

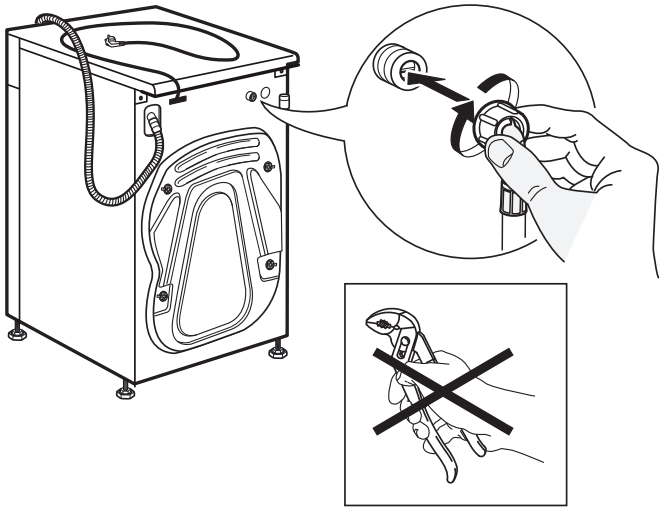

12.

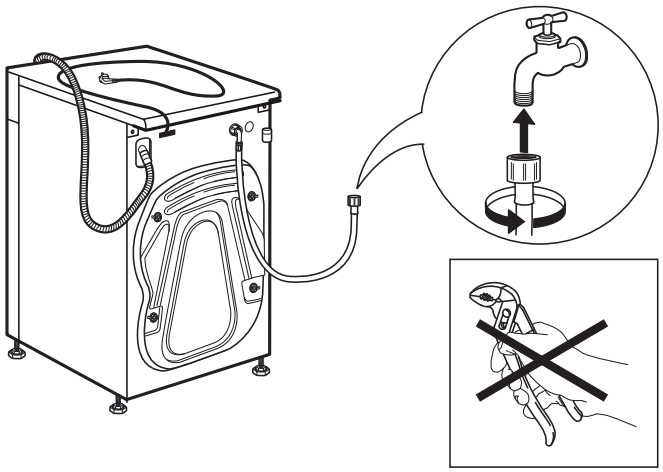

13.

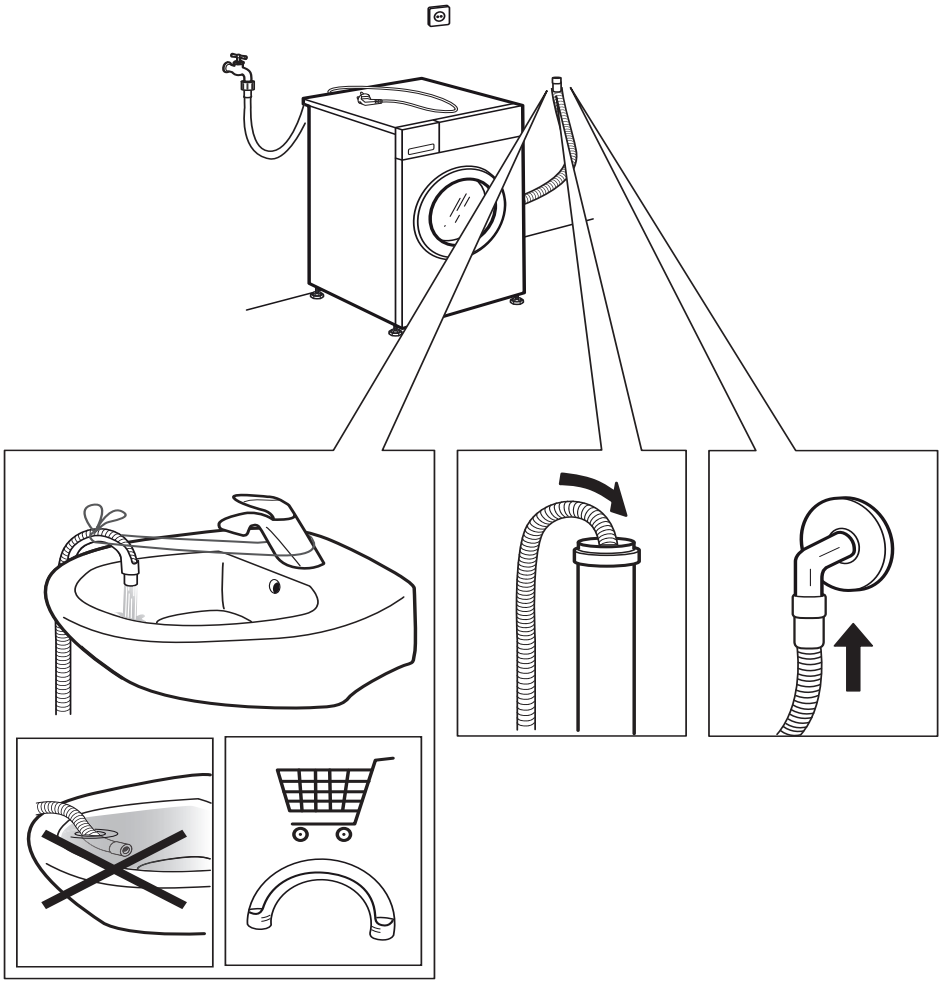

Bauknecht
Mehr als Technik

14.

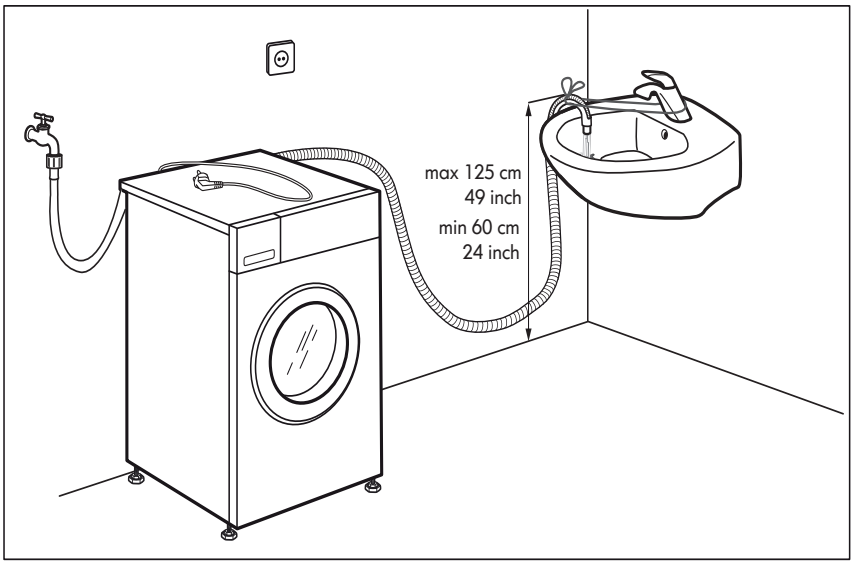

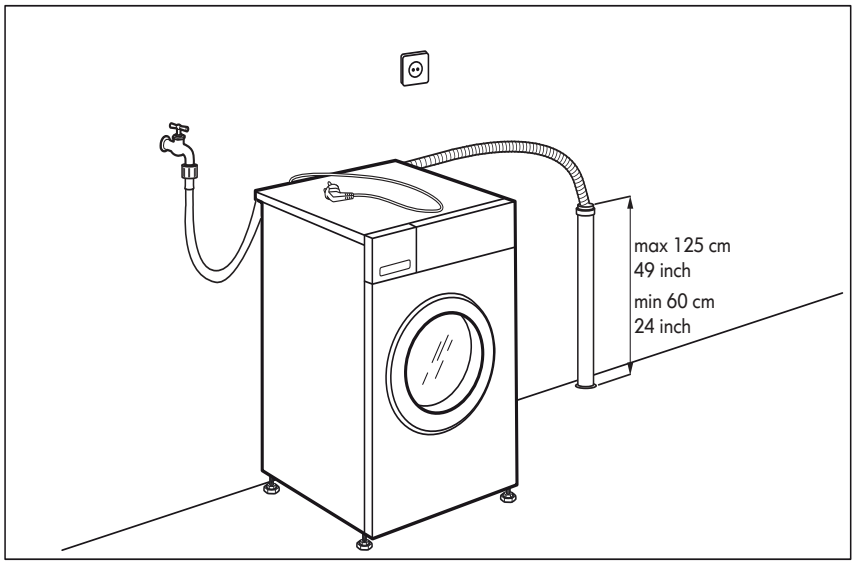

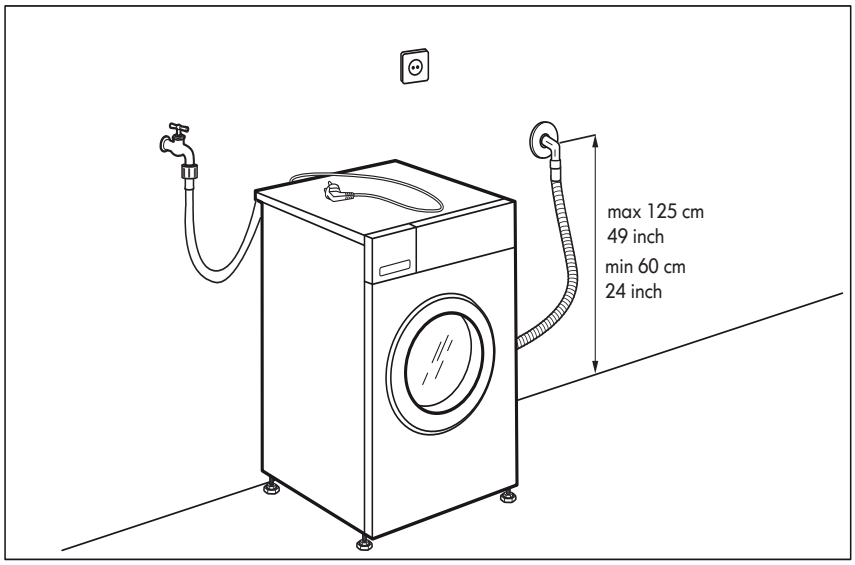

Bauknecht
Mehr als Technik

15.

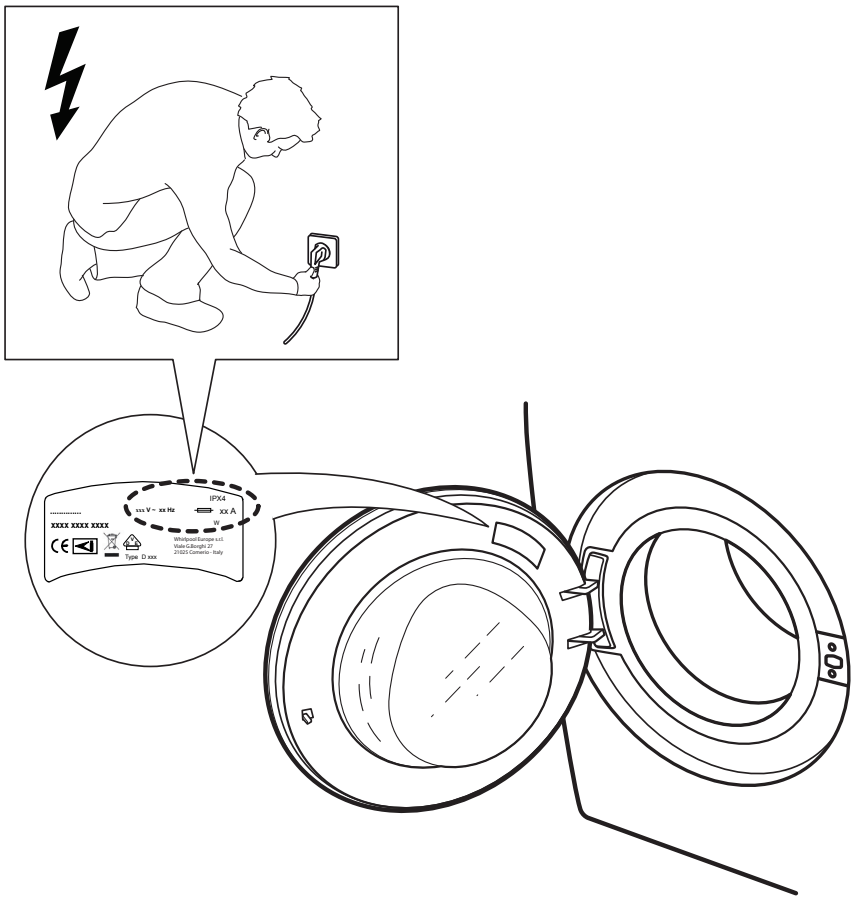

16.

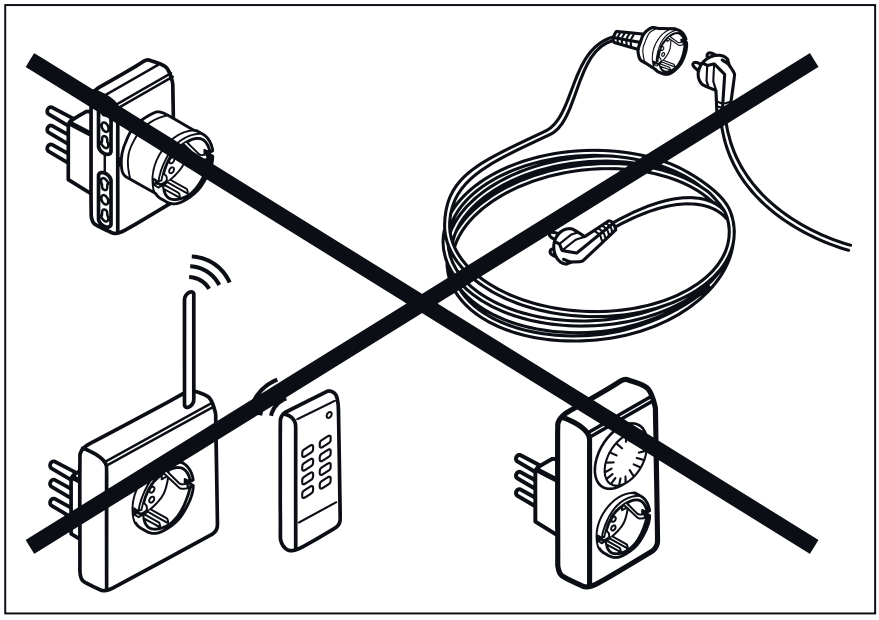

400010860088

Printed in Italy

Bauknecht

Mehr als Technik