THANK YOU FOR BUYING A INDESIT PRODUCT

In order to receive a more complete assistance, please register your product on **www.indesit.com/register**

Before using the appliance carefully read the Safety Instruction.
Before using the machine, it is imperative that the transport bolts are removed.
For more detailed instructions on how to remove them, see the Installation Guide.

CONTROL PANEL

1. ON/OFF button
2. TEMPERATURE button
3. OPTION buttons and indicator lights
4. START/PAUSE button and indicator light
5. DRYING button
6. SPIN button
7. WASH CYCLE SELECTOR KNOB
8. Detergent dispenser drawer

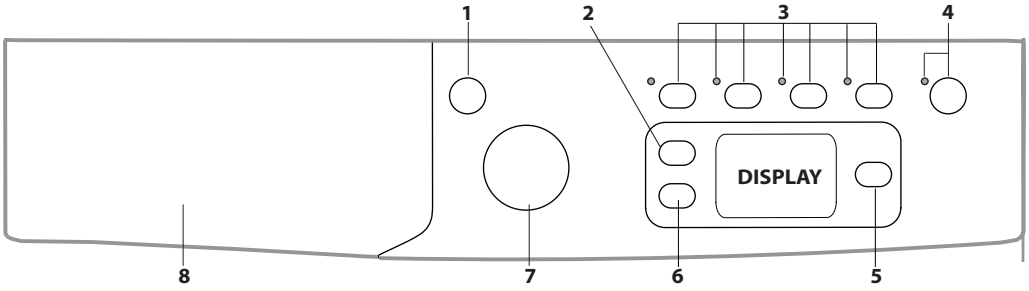

WASH CYCLE TABLE

Maximum load 7 kg Power input in off mode 0.5 W / in left-on mode 8 W									Detergents and Additives		Recommended detergent					
Wash cycle		Temperature		Max. spin speed (rpm)	Max. load for washing (kg)	Duration (h : m)	Drying	Max. load for drying (kg)	Wash	Fabric softener	Powder	Liquid	Residual dampness % (***)	Energy consumption kWh	Total water lt	Laundry temperature °C
		Setting	Range						2	3						
1	**Mix Coloured 59'**	40 °C	❄ - 40 °C	1000	7,0	**	●	5,0	●	○	–	✔	–	–	–	–
2	**Synthetics 59'**	30°C	❄ - 30 °C	1000	3,5	**	●	3,5	●	○	–	✔	–	–	–	–
3	**Cotton 45'**	40 °C	❄ - 40 °C	1200	4,5	**	●	4,5	●	○	–	✔	–	–	–	–
4	**Wash&Dry 90'**	30°C	30°C	1200	1,0	**	●	1,0	●	○	–	✔	–	–	–	–
5	**Wash&Dry 45'**	30°C	30°C	1400	1,0	**	●	1,0	●	○	–	✔	–	–	–	–
6	**Cotton (2)**	40 °C	❄ - 60 °C	1400	7,0	3:55	●	5,0	●	○	✔	✔	49	1,40	105	45
7	**Synthetics (3)**	40 °C	❄ - 60 °C	1200	4,0	2:55	●	4,0	●	○	✔	✔	35	0,8	55	43
8	**Wool**	40 °C	❄ - 40 °C	800	2,0	**	●	2,0	●	○	–	✔	–	–	–	–
9	**Eco 40-60 (1)** **(Wash)**	40 °C	40°C	1351	7,0	3:28	●	5,0	●	○	✔	✔	53	1,05	50	38
				1351	3,5	2:42	●		●	○	✔	✔	53	0,78	50	36
				1351	2,0	2:10	●		●	○	✔	✔	53	0,60	35	35
10	**20°C**	20 °C	❄ - 20 °C	1400	7,0	1:50	●	5,0	●	○	–	✔	49	0,16	90	22
11	**Whites**	60°C	❄ - 90 °C	1400	7,0	2:45	●	5,0	●	○	✔	✔	49	0,90	90	55
12	**Dry Cotton**	–	–	–	6,0	**	●	5,0	–	–	–	–	–	–	–	–
13	**Dry Synthetics**	–	–	–	4,0	**	●	4,0	–	–	–	–	–	–	–	–
14	**Rinse**	–	–	1400	7,0	**	●	5,0	–	○	–	–	–	–	–	–
15	**Spin**	–	–	1400	7,0	**	●	5,0	–	–	–	–	–	–	–	–
16	**Drain**	–	–	–	7,0	**	–	5,0	–	–	–	–	–	–	–	–
● Required dosage ○ Optional dosage																
9	**Eco 40-60 (4)** **(Wash&Drying)**	40 ℃	40 ℃	1351	5.0	9:50	●	5.0	●	○	✔	✔	0	4.50	75	34
				1351	2.5	5:40	●	2.5	●	○	✔	✔	0	2.50	52	35

The cycle duration indicated on the display or instruction manual is an estimate based on standard conditions. The actual duration may vary in relation to several factors, such as the temperature and pressure of the incoming water, ambient temperature, amount of detergent, load quantity and type, load balancing and any additional options selected.The values given for programmes other than the Eco 40-60 programme are indicative only.

1) Eco 40-60 (Wash) - Test wash cycle in compliance with EU Ecodesign regulation 2019/2014. The most efficient programme in terms of energy and water consumption for washing normally soiled cotton laundry.
Note: spin speed values shown on the display can slightly differs from the values stated in the table.

Eco 40-60 (Drying)- Test drying cycle in compliance with EU Ecodesign regulation 2019/2014. To access "wash and dry" cycle select "Eco 40-60" wash programme and set "Drying" option level to "A3". The most efficient programme in terms of energy and water consumption for washing and drying normally soiled cotton laundry. At the end of cycle the garments can be immediately stored to the cupboard.

For all testing institutes:
2) Long cotton cycle: set programme 6 at temperature 40°C.
3) Long synthetics cycle: set cycle 7 at a temperature of 40°C.

** The duration of the wash cycles can be checked on the display.

*** After programme end and spinning with maximum selectable spin speed, in default programme setting.

PRODUCT DESCRIPTION

1. Top
2. Detergent dispenser drawer
3. Control panel
4. Handle
5. Porthole door
6. Drain pump (behind the plinth)
7. Plinth (removable)
8. Adjustable feet (2)

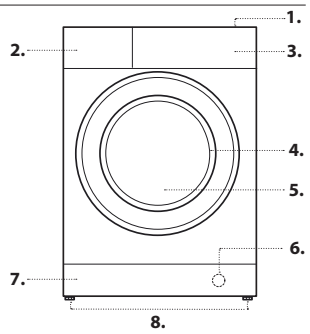

DETERGENT DISPENSER DRAWER

Compartment 1: Do not pour detergent into the compartment **1**.
Detergent should only be poured into the compartment **2**.
Compartment 2: Washing detergent (powder or liquid)
Liquid detergent should only be poured in immediately prior to the start of the wash cycle.
Compartment 3: Additives (fabric softener, etc.)
The fabric softener should not overflow the grid.

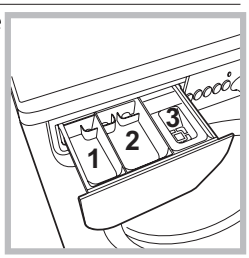

Note: If a "tablet detergent" is used, always follow the manufacturer's instructions.

! Use powder detergent for white cotton garments, for pre-washing, and for washing at temperatures over 60°C.
! Follow the instructions given on the detergent packaging.

WASH CYCLES



Follow the instructions on the symbols of the garment's wash care label. The value indicated in the symbol is the maximum recommended temperature for washing the garment.

Mix Coloured 59'
To wash mixed and coloured items together.
Synthetics 59'
Suitable for washing moderately soiled garments made of synthetic fibres (e.g. polyester, polyacrylic, viscose, etc.) or mixed synthetic-cotton fibres.
Cotton 45'
short cycle designed to wash delicate cotton items.
Wash&Dry 90'
The cycle guarantees the washing and drying performances for a 1 kg load in 90 minutes (level "**A1**" Iron dry); for larger loads, the cycle's duration increases in order to guarantee the cycle performances.
Wash&Dry 45'
Select programme 5 for washing and drying lightly soiled garments (Cotton and Synthetic) in a short time. This cycle may be used to wash and dry a laundry load of up to 1 kg in just 45 minutes (level "**A1**" Iron dry). To achieve optimum results, use liquid detergent and pre-treat cuffs, collars and stains.
Cotton
Suitable for washing towels, underwear, table cloths, etc. made of resistant linen and cotton that are moderately to heavily soiled.
Synthetics
Specific for synthetic items. If the dirt is difficult to remove, the temperature can be increased up to 60° and powder detergent can be used too.
Wool
All wool garments can be washed using programme 8, even those carrying the "hand-wash only" label. For best results, use special detergents and do not exceed 2 kg of laundry.
Eco 40-60
For washing normally soiled cotton garments declared to be washable at 40 °C or 60 °C, together in the same cycle. This is the standard cotton programme and the most efficient in terms of water and energy consumption.
! The cycle runs only at 40°C as per regulation.
20°C
For washing lightly soiled cotton garments, at a temperature of 20 °C.
Whites
For heavily soiled whites and resistant colours.
Dry Cotton
Designed for drying cotton fabrics.
Dry Synthetics
Designed for drying Synthetics fabrics.
Rinse
Designed for rinsing and spinning.
Spin
Designed to spin and drain the water.
Drain
Designed for draining the water.

DISPLAY

The display is useful when programming the machine and provides a great deal of information.

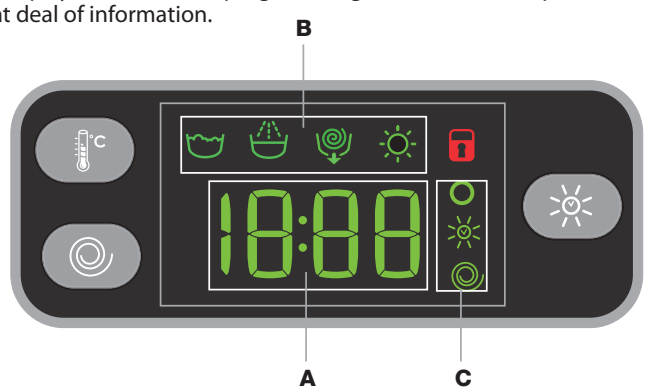

The duration of the available programmes and the remaining time of a running cycle appear in section **A**; if the DELAY TIMER option has been set, the countdown to the start of the selected programme will appear. Furthermore, pressing the corresponding button allows you to view the maximum temperature, spin speed and drying level or time values attained by the machine during the selected cycle.

The phases scheduled for the selected cycle and, once the cycle has begun, the current phase of the wash cycle (and drying cycle, if applicable) appear in section **B**.

Wash

Rinse

Spin / Drain

Drying

The icons corresponding to "temperature", "Drying" and "spin" appear in section **C** from top to bottom:

If the symbol lights up, the display will visualise the set "temperature" value.

The symbol lights up while the drying settings are being adjusted.

If the symbol lights up, the display will visualise the set "spin" value.

DOOR LOCKED INDICATOR

When lit, the symbol indicates that the door is locked. To prevent any damage, wait until the symbol turns off before opening the door .
To open the door while a cycle is in progress, press the START/PAUSE button ; if the symbol is off, the door can be opened .

FIRST-TIME USE

Once the appliance has been installed, and before it is used for the first time, run a wash cycle with detergent and no laundry, by setting the "Auto Clean" cycle.

DAILY USE

Prepare the laundry by following the suggestions appearing under the "TIPS AND SUGGESTIONS" section.
- Press the ON/OFF button ; the START/PAUSE indicator light will flash slowly green.
- Open the door. Load the laundry while making sure not to exceed the maximum load quantity indicated in the Wash Cycle Table.
- Pull out the detergent dispenser drawer and pour the detergent into the relevant compartments as described in "DETERGENT DISPENSER DRAWER" section.
- Close the door.
- Select the desired wash cycle.
- Set the washing temperature.
- Set the drying cycle if necessary.
- Select the desired options.

STARTING CYCLE
Press the START/PAUSE button.
The machine will lock the door (symbol on) and the drum will start to rotate; the door will be unlocked (symbol off) and then locked again (symbol on) as preparation phase of each washing cycle. The "Clicking" noise is part of the door locking mechanism. Water will enter the drum and start the washing phase once the door is locked.

PAUSING A CYCLE

To pause the wash cycle, press the START/PAUSE button again; the indicator light will flash amber. If the symbol is not lit, the door may be opened . To start the wash cycle from the point at which it was interrupted, press the START/PAUSE button again.

OPENING THE DOOR, IF NECESSARY

Once a cycle starts, the symbol turns on to signal that the door cannot be opened. While a wash cycle is running, the door remains locked. To open the door while a cycle is under way, for example, to add or remove garments, press the START/PAUSE button to pause the cycle; the indicator light will flash amber. If the symbol is not lit, the door may be opened . Press the START/PAUSE button again to continue the cycle.

CHANGING A RUNNING WASH CYCLE

To change a wash cycle while it is in progress, pause the washer-dryer using the START/PAUSE button (the relative indicator light will flash amber), then select the desired cycle and press the START/PAUSE button again.
! To cancel a cycle that has already begun, press and hold the ON/OFF button. The cycle will be stopped and the machine will switch off.

END OF THE CYCLE

Once the cycle terminates the **END** indicator light will light up; when the symbol switches off, the door may be opened . Open the door, unload the laundry and switch off the machine. If you do not press ON/OFF button, the washer-dryer will switch off automatically after about a 10 minutes. .
Close the water tap, open the door and unload the washer-dryer. Leave the door ajar to allow the drum to dry.

OPTIONS

- If the selected option is not compatible with the programmed wash cycle, the indicator light will flash and the option will not be activated.
- If the selected option is not compatible with another option which has been selected previously, the indicator light corresponding to the first option selected will flash and only the second option will be activated; the indicator light corresponding to the enabled option will remain lit.

Extra Wash

Enable the Extra Wash option for very dirty items, where compatible. Press this option to let the cycle automatically re-adjust all wash parameters through a longer lasting cycle. The option always leaves the temperature unchanged, while the spin cycle is automatically brought back to maximum levels. The user can set the spin cycle back to the desired value at any time.

Easy Iron
By selecting this function, the wash and spin cycles will be modified in order to reduce the formation of creases.
Note: If you also want to run the drying cycle, this option is enabled only if combined with level "**A1**"(Iron dry).
Extra rinse
By selecting this option, the efficiency of the rinse is increased and optimal detergent removal is guaranteed. It is particularly useful for sensitive skin.
Delay timer
To set a delayed start for the selected cycle, press the corresponding button repeatedly until the required delay period has been reached. When this option is enabled, the corresponding indicator light will remain lit. To remove the delayed start setting, press the button until the text "OFF" appears on the display.
Temperature
Each wash cycle has a pre-defined temperature. To modify the temperature, press the button. The value will appear on the display.
Spin
Each wash cycle has a pre-defined spin speed. To modify the spin speed, press the button. The value will appear on the display.
Drying cycle
The first time the button is pressed, the machine will automatically select the maximum drying cycle which is compatible with the selected wash cycle. Subsequent presses will decrease the drying level and then the drying time, until the cycle is excluded completely ("OFF").
Drying may be set as follows:
A - Based on the desired laundry dryness level:
Iron dry "A1": suitable for clothes which will need ironing afterwards. the remaining dampness softens creases, making them easier to remove.
Hanger dry "A2": ideal for clothes which do not need to be dried fully.
Cupboard dry "A3": suitable for laundry which can be put back in a cupboard without being ironed.
Extra dry "A4": suitable for laundry which can be put back in a cupboard without being ironed.
B - Based on a set time period: between **30** and **180** minutes.
If your laundry load to be washed and dried is much greater than the maximum stated load (see Wash Cycle Table), perform the wash cycle, and when the cycle is complete, divide the garments into groups and put some of them back in the drum.
At this point, follow the instructions provided for a **Drying only** cycle. Repeat this procedure for the remainder of the load.
N.B: a cooling-down period is always added to the end of each drying cycle.
Drying only
Use the cycle selector knob to select a drying cycle (**12**-**13**) in accordance with the type of fabric. The desired drying level or time may also be set using the DRYING button .

TIPS AND SUGGESTIONS

Divide the laundry according to:
Type of fabric (cotton, mixed fibres, synthetics, wool, garments to be hand-washed). Colour (separate coloured garments from whites, wash new coloured garments separately). Delicates (small garments – such as nylon stockings – and items with hooks – such as bras: insert them in a fabric bag).
Empty the pockets:
Objects such as coins or lighters can damage the washer-dryer and the drum. Check all buttons.
Follow the dosage recommendation / additives
It optimizes the cleaning result, it avoids irritating residues of surplus detergent in your laundry and it saves money by avoiding waste of surplus detergent.
Use low temperature and longer duration
The most efficient programmes in terms of energy consumption are generally those that perform at lower temperatures and longer duration.
Observe the load sizes
Load your washing machine up to the capacity indicated in the "Wash Cycle Table" table to save water and energy.
Noise and remaining moisture content
They are influenced by the spinning speed: the higher the spinning speed in the spinning phase, the higher the noise and the lower the remaining moisture content.

CARE AND MAINTENANCE

Before performing cleaning and maintenance, switch the washer-dryer off and disconnect it from the mains power. Do not use flammable liquids to clean the washer-dryer. Clean and maintain your washer-dryer periodically (at least 4 times per year).
Disconnect the water and power supplies
Close the water tap after every wash. This will limit wear on the hydraulic system inside the washer-dryer and help to prevent leaks.
Unplug the washer-dryer when cleaning it and during all maintenance work.
Clean the washer-dryer
The outer parts and rubber components of the appliance can be cleaned using a soft cloth soaked in lukewarm soapy water. Do not use solvents or abrasives.
The washer-dryer has a "Auto Clean" programme for its internal parts that must be run with no load in the drum.
For maximum performance you may want to use either the detergent (i.e. a quantity 10% the quantity specified for lightly-soiled garments) or special additives to clean the washer-dryer. We recommend running a cleaning programme every 40 wash cycles.
To start the programme press buttons and simultaneously for 5 seconds.
The programme will start automatically and will last approximately 70 minutes.
Clean the detergent dispenser drawer
Wash it under running water; this operation should be repeated frequently.
Care for the door and drum
Always leave the porthole door ajar in order to prevent unpleasant odours from forming.
Clean the pump
The washer-dryer is fitted with a auto-cleaning pump that does not require any maintenance. Small items (such as coins or buttons) may sometimes fall into the protective pre-chamber situated at the base of the pump.
! Make sure the wash cycle has ended and unplug the appliance.
To access the pre-chamber:
1. remove the cover panel on the front of the machine by first pressing it in the centre then pushing downwards on both sides to extract it;
2. loosen the drainage pump cover by turning it anti-clockwise: it is normal for some water to leak out;
3. clean the inside thoroughly;
4. screw the cover back on;
5. put the panel back in place, making sure the hooks slot in place before pushing the panel onto the appliance.
Check the water inlet hose
Check the water inlet hose at least once a year. If it is cracked or broken, it must be replaced: during wash cycles, the high pressure of the water could suddenly split the hose open.
! Never use hoses that have already been used.

LOAD BALANCING SYSTEM

Before every spin cycle, to avoid excessive vibrations before every spin and to distribute the load in a uniform manner, the drum rotates continuously at a speed which is slightly greater than the washing rotation speed. If, after several attempts, the load is not balanced correctly, the machine spins at a reduced spin speed. If the load is excessively unbalanced, the washer-dryer performs the distribution process instead of spinning. To encourage improved load distribution and balance, we recommend small and large garments are mixed in the load.

ACCESSORIES

Contact our Technical Assistance Service to check whether the following accessories are available for this washer-dryer model.

Stacking kit
With this accessory you can secure the tumble dryer to the upper part of your washer-dryer to save space and facilitate loading and unloading of the tumble dryer.

TRANSPORT AND HANDLING

Do not lift the washer-dryer by gripping it from the upper section.
Unplug the appliance and close the water tap. Check that the door and detergent dispenser drawer are tightly closed. Detach the filling hose from the water tap then detach the drain hose. Empty all the water remaining in the hoses and secure the latter so that they do not get damaged during transport. Apply the transport bolts back on. Repeat, in reverse order, the transport bolt removal procedure described in the "Health & Safety and Installation Guides".

TROUBLESHOOTING

The washer-dryer may occasionally fail to work. Before contacting the Technical Assistance Service, make sure that the problem cannot be easily solved using the following list.

Anomalies	Possible causes / Solution
The washer-dryer does not start.	The appliance is not plugged into the socket, or not sufficiently to make contact.
	There is no power in the house.
The wash cycle does not start.	The washer-dryer door is not closed properly.
	The ON/OFF ⏻ button has not been pressed.
	The START/PAUSE ⏯ button has not been pressed.
	The water tap has not been opened.
	A delay has been set for the start time.
The washing machine does not fill with water ("H2O" flashes on the display).	The water inlet hose is not connected to the tap.
	The hose is bent.
	The water tap has not been opened.
	There is no water supply in the house.
	The pressure is too low.
	The START/PAUSE ⏯ button has not been pressed.
The washer-dryer continuously loads and unloads water.	The drain hose is not fitted between 65 and 100 cm from the floor.
	The free end of the hose is immersed in water.
	The wall drainage system does not have a breather pipe. If the problem persists even after these checks, turn off the water tap, switch the appliance off and contact the Technical Assistance Service. If the home is on one of the upper floors of a building, there may be problems relating to back-siphonage, causing the washer-dryer to fill with water and drain continuously. Special anti-siphon valves are available in shops and help to prevent this inconvenience.
The washer-dryer does not drain or spin.	The cycle does not include drainage: with certain cycles it must be started manually.
	The "Easy iron" option has been activated: To complete the wash cycle, press the START/PAUSE ⏯ button.
	The drain hose is bent.
	The drainage duct is clogged.
The washer-dryer vibrates a lot during the spin cycle.	The drum was not unlocked correctly during installation.
	The washer-dryer is not level.
	The washer-dryer is tucked between furniture cabinets and the wall.
The washer-dryer leaks.	The water inlet hose is not screwed on properly.
	The detergent dispenser drawer is obstructed.
	The drain hose is not properly attached.
The "Option" indicator lights and the START/PAUSE ⏯ indicator light flash and an error code appears on the display (e.g.: F-01, F-..).	Switch off the machine and unplug it, wait for approximately 1 minute and then switch it back on again. If the problem persists, contact the Technical Assistance Service .
There is too much foam.	The detergent is not suitable for machine washing (it should be marked with "for washing machine use" or "hand wash and machine wash" or similar).
	Too much detergent was used.
The wash cycle does not start.	The appliance is not plugged into the socket, or not sufficiently to make contact.
	There is no power in the house.
	The washer-dryer door is not closed properly.
	The ON/OFF ⏻ button has not been pressed.
	The START/PAUSE ⏯ button has not been pressed.
	The water tap has not been opened.
	A delay has been set for the start time.
	DRYING is in the **OFF** position.

You can download the Safety Instructions, Product Fiche and Energy data by:

- Visiting our website - **http://docs.indesit.eu**
- Using QR Code
- Alternatively, **contact our After-sales Service** (See phone number in the warranty booklet). When contacting our After-sales Service, please state the codes provided on your product's identification plate.
- For User's Repair & Maintenance Information visit www.indesit.com

The model information can be retrieved using the QR-Code reported in the energy label. The label also includes the model identifier that can be used to consult the portal of the registry at https://eprel.ec.europa.eu

