**THANK YOU FOR PURCHASING A HOTPOINT PRODUCT.**

To receive more comprehensive assistance, register the appliance on
**www.hotpoint.eu/register**

**Before using the appliance carefully read the Health and Safety guide.**

Before using the machine, it is imperative that the transport bolts are removed. For more detailed instructions on how to remove them, see the Installation Guide.

## CONTROL PANEL

1. EXTRA RINSE / MUTE button
2. FINAL CARE / KEY LOCK button
3. ON/OFF button
4. STEAM HYGIENE button and indicator light
5. START/PAUSE button
6. RAPID button
7. SPIN button
8. START DELAY button
9. TEMPERATURE button
10. WASH CYCLE SELECTOR KNOB

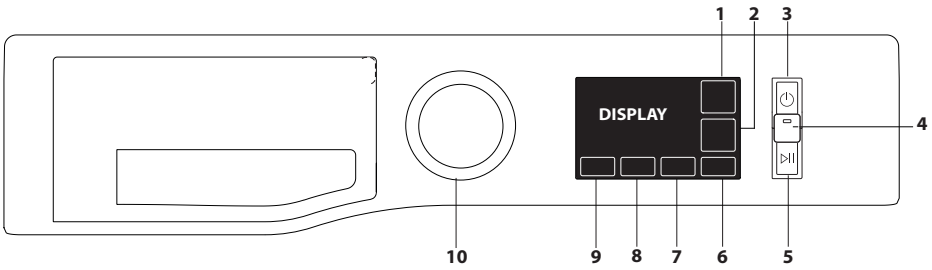


## WASH CYCLE TABLE

| Maximum load 9 kg<br>Power input in off mode 0.5 W / in left-on mode 8 W | | | | | | | Detergents and Additives | | | Recommended detergent | | | | | |
|---|---|---|---|---|---|---|---|---|---|---|---|---|---|---|---|
| Wash cycle | Temperature | | Max. spin speed (rpm) | Max. load (kg) | Duration (h : m) | Add Garments | Pre-wash | Wash | Fabric softener | Powder | Liquid | Residual dampness % (****) | Energy consumption kWh | Total water lt | Laundry temperature °C |
| | Setting | Range | | | | | 1 | 2 | 3 | | | | | | |
| **Eco 40-60 (1)** | 40 °C | 40°C | 1351 | 9,0 | 3:40 | ● | – | ● | ○ | ✔ | ✔ | 53 | 0,88 | 57 | 33 |
| | | | 1351 | 4,5 | 2:50 | ● | – | ● | ○ | ✔ | ✔ | 53 | 0,65 | 50 | 35 |
| | | | 1351 | 2,25 | 2:20 | ● | – | ● | ○ | ✔ | ✔ | 53 | 0,47 | 44 | 33 |
| **Cotton (2)** | 40°C | ❄ - 60°C | 1400 | 9,0 | 3:45 | ● | – | ● | ○ | ✔ | ✔ | 53 | 1,10 | 97 | 45 |
| **Synthetics (3)** | 40°C | ❄ - 60°C | 1200 | 4,5 | 2:55 | ● | – | ● | ○ | ✔ | ✔ | 35 | 0,54 | 74 | 43 |
| **Mixed** | 40°C | ❄ - 40°C | 1400 | 9,0 | ** | ● | – | ● | ○ | – | ✔ | – | – | – | – |
| **Delicates** | 40°C | ❄ - 40°C | 1000 | 4,5 | ** | ● | – | ● | ○ | – | ✔ | – | – | – | – |
| **White** | 40°C | ❄ - 90°C | 1400 | 9,0 | 2:00 | ● | ● (***) | ● | ○ | ✔ | ✔ | 55 | 0,89 | 110 | 42 |
| **Anti Stain 40°** | 40°C | ❄ - 40°C | 1000 | 4,5 | ** | ● | – | ● | ○ | ✔ | ✔ | – | – | – | – |
| **Rapid 30 min** | 30°C | ❄ - 30°C | 800 | 4,5 | 0:30 | ● | – | ● | ○ | – | ✔ | 71 | 0,18 | 37 | 27 |
| **Spin & Drain *** | – | – | 1400 | 9,0 | ** | – | – | – | – | – | – | – | – | – | – |
| **Rinse & Spin** | – | – | 1400 | 9,0 | ** | – | – | – | ○ | – | – | – | – | – | – |
| **Steam Refresh** | – | – | – | 2,0 | ** | – | – | – | – | – | – | – | – | – | – |
| **20°C** | 20 °C | ❄ - 20 °C | 1400 | 9,0 | 1:50 | ● | – | ● | ○ | – | ✔ | 55 | 0,14 | 78 | 22 |
| **Wool** | 40°C | ❄ - 40°C | 800 | 2,0 | ** | ● | – | ● | ○ | – | ✔ | – | – | – | – |
| **Anti Allergy** | 60°C | 40°C - 60°C | 1400 | 5,0 | ** | ● | – | ● | ○ | ✔ | ✔ | – | – | – | – |
| **Bed & Bath** | 60°C | ❄ - 60°C | 1400 | 9,0 | ** | ● | – | ● | ○ | ✔ | ✔ | – | – | – | – |
| ● Dosing required ○ Dosing optional | | | | | | | | | | | | | | | |
| **Eco Cotton (4)** | 60 °C | 60 °C | 1400 | 9,0 | 4:20 | ● | – | ● | ○ | ✔ | ✔ | 53 | 0,74 | 56 | – |
| **(Cotton )** | 40 °C | 40 °C | 1400 | 9,0 | 3:45 | ● | – | ● | ○ | ✔ | ✔ | 53 | 1,10 | 97 | – |

The cycle duration indicated on the display or instruction manual is an estimate based on standard conditions. The actual duration may vary in relation to several factors, such as the temperature and pressure of the incoming water, ambient temperature, amount of detergent, load quantity and type, load balancing and any additional options selected.The values given for programmes other than the Eco 40-60 programme are indicative only.

**1) Eco 40-60 -** Test wash cycle in compliance with EU Ecodesign regulation 2019/2014. The most efficient programme in terms of energy and water consumption for washing normally soiled cotton laundry.
**Note:** spin speed values shown on the display can slightly differs from the values stated in the table.

**For all testing institutes:**
2) Long cotton cycle: set wash cycle **Cotton** with a temperature of 40°C.
3) Long synthetics cycle: set wash cycle **Synthetics** with a temperature of 40°C.

* By selecting the **Spin & Drain** cycle and excluding the spin cycle, the washing machine will drain only.

** The duration of the wash cycles can be checked on the display**.**

*** For Prewash press the **"Temp."** button until the symbol lights up (only 90°).

**** After programme end and spinning with maximum selectable spin speed, in default programme setting.

**4) Eco Cotton -** Test wash cycles in compliance with regulations 1061/2010. Set **"Cotton "** wash cycle at a temperature of 40°C or 60°C to access this cycles.

## PRODUCT DESCRIPTION

1. Top
2. Detergent dispenser drawer
3. Control panel
4. Handle
5. Porthole door
6. Drain pump (behind the plinth)
7. Plinth (removable)
8. Adjustable feet (2)

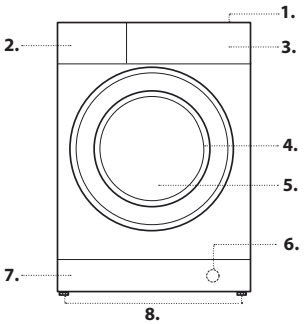


## DETERGENT DISPENSER DRAWER

**compartment 1: Pre-wash detergent (powder)**
**compartment 2: Detergent for the wash cycle (powder or liquid)**
If liquid detergent is used, it is recommended that the removable plastic partition A (supplied) be used for proper dosage.
If powder detergent is used, place the partition into slot B.
**compartment 3: Additives (fabric softeners, etc.)**
The fabric softener should not overflow the grid.
**!** Use powder detergent for white cotton garments, for pre-washing, and for washing at temperatures over 60°C.
**!** Follow the instructions given on the detergent packaging.

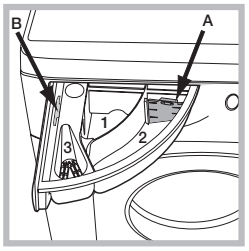

## WASH CYCLES

*Follow the instructions on the symbols of the garment's wash care label. The value indicated in the symbol is the maximum recommended temperature for washing the garment.*



**Eco 40-60**
For washing normally soiled cotton garments declared to be washable at 40 °C or 60 °C, together in the same cycle. This is the standard cotton programme and the most efficient in terms of water and energy consumption.

**Cotton**
Normally to heavily soiled and robust cottons.

**Synthetics**
Suitable for washing moderately soiled garments made of synthetic fibres (e.g. polyester, polyacrylic, viscose, etc.) or mixed synthetic-cotton fibres.

**Mixed**
For washing lightly to normally soiled resilient garments in cotton, linen, synthetic fibres and mixed fibres.

**Delicates**
For washing very delicate garments. It is advisable to turn the garments inside out before washing them. For best results, use liquid detergent on delicate garments.

**White**
For washing normally to heavily soiled towels, underwear, table and bed linen, etc in resilient cotton and linen. Only when the temperature is selected at 90°C the cycle is provided with a prewash phase before main washing phase. In this case it is recommended to add detergent both, in the prewash and main wash section.

**Anti Stain 40°**
The programme is suitable to heavily-soiled garments with resistant colours. It ensures a washing class that is higher than the standard class (A class). When running the programme, do not mix garments of different colours. We recommend the use of powder detergent. Pre-treatment with special additives is recommended if there are obstinate stains.

**Rapid 30 min**
For washing lightly soiled garments quickly. This cycle lasts only 30 minutes, saving time and energy.

**Spin & Drain**
Spins the load then empties the water. For resilient garments. If you exclude the spin cycle, the machine will drain only

**Rinse & Spin**
Rinses and then spins. For resilient garments.

**Steam Refresh**
The garments will be damp once the cycle is completed, so we recommend hanging them to dry (2 kg, roughly 3 items). This programme refreshes garments by removing bad odours and relaxing the fibres. Insert dry items only (that are not dirty) and select programme "**Steam Refresh**". Garments will be a little damp at the end of the cycle and can be worn after a few minutes. The "**Steam Refresh**" programme makes ironing easier.
! Do not add softeners or detergents.
! Not recommended for wool or silk garments.

**20°C**
For washing lightly soiled cotton garments, at a temperature of 20 °C.

**Wool - *Woolmark Apparel Care - Green:***
The "Wool" wash cycle is approved by the Woolmark Company for washing wool garments classified as "hand-washable", provided that the wash complies with the instructions appearing on the garment's label and with those provided by the manufacturer of this washing machine. (M1127)




*In UK, Eire, Hong Kong and India the Woolmark trade mark is a Certification trade mark.*

**Anti Allergy**
Suitable for removing major allergens such as pollen, mites and cat or dog hair.

**Bed & Bath**
For washing home linen in a single cycle. It optimises the use of fabric softener and allows for saving time and electricity. We recommend the use of powder detergent.

**Eco Cotton**
For washing normally soiled cotton garments. At 40°C and 60°C.

## DISPLAY

The display is useful when programming the washing machine and provides plenty of information.

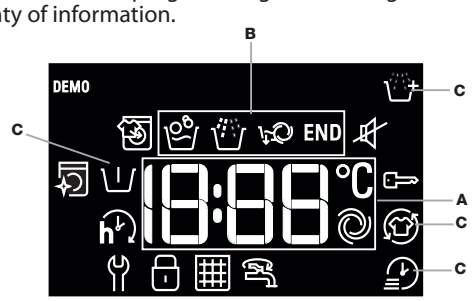


The duration of the available wash cycles and the remaining time of a running cycle appear in section **A** (the display will show the maximum duration of the cycle chosen, which may decrease after several minutes, since the effective duration of the programme varies depending on the wash load and the settings chosen); if the DELAYED START option has been set, the countdown to the start of the selected wash cycle will appear. Pressing the corresponding button allows you to view the maximum spin speed and temperature values attained by the machine during the set wash cycle, or the values selected most recently, if these are compatible with the set wash cycle.
The "wash cycle phases" corresponding to the selected wash cycle and the "wash cycle phase" of the running wash cycle appear in section **B**:

Main wash
Rinse
Spin + Pump out

References **C** indicate the wash options available (See "Options" section).
The "Start Delay" symbol, when lit, indicates that the set "delayed start" value has appeared on the display.
The symbol indicates the possibility of inserting an additional garments load with the washing program started (See "Adding Garments" section).
The symbol indicates the possibility to silence the key tones
While the mute is active, almost all sounds will be turned off. Only the sound signals and the alarms remain active, as well as the sound of the end of cycle.
For activate/deactivate the mute press and hold button.

**DISPLAY INDICATORS**
Failure: Call Service
Refer to Troubleshooting section
Failure: Water filter clogged
Water cannot be drained; water filter might be blocked
Failure: No water
No or not sufficient inlet water.
In the event of any failure, refer to the "Troubleshooting" section.

**Key Lock**
To lock the control panel, press and hold the "Key lock" button for approximately 3 seconds. The symbol will light up on the display to indicate that the control panel has been locked (with the exception of the "ON/OFF" button). This prevents unintentional changes to programmes, especially with children near the machine. To unlock the control panel, press and hold the "Key lock" button for approximately 3 seconds .

**Locked door indicator**
When lit, the symbol indicates that the door is locked. To prevent any damage, wait until the symbol turns off before opening the door.
To open the door while a cycle is in progress, press the START/PAUSE button if the symbol is off, the door can be opened.

## FIRST-TIME USE

Once the appliance has been installed, and before you use it for the first time, run a wash cycle with detergent and no laundry, using the wash cycle **White (60°)**.

## DAILY USE

Prepare the laundry by following the suggestions appearing under the "TIPS AND SUGGESTIONS" section.
- Press the ON/OFF button .
- Open the door. Load the laundry while making sure not to exceed the maximum load quantity indicated in the wash cycle table.
- Pull out the detergent dispenser drawer and pour the detergent into the relevant compartments, as described in the "DETERGENT DISPENSER DRAWER" section.
- Close the door.
- The machine automatically displays the default temperature and spin speed values for the selected cycle, or the most recently used settings if they are compatible with the selected cycle.
- Select the desired wash cycle.
- Select the desired options.
- Press the START/PAUSE button to start the wash cycle; the door will lock ( symbol on).

## PAUSING A CYCLE

To pause the wash cycle, press the START/PAUSE button again. To start the wash cycle from the point at which it was interrupted, press the START/PAUSE button again.

## OPENING THE DOOR, IF NECESSARY

Once a cycle starts, the symbol turns on to signal that the door cannot be opened. While a wash cycle is running, the door remains locked. To open the door while a cycle is under way, for example, to add or remove garments, press the START/PAUSE button to pause the cycle. If the symbol is not lit, the door may be opened. Press the START/PAUSE button again to continue the cycle.

## ADDING GARMENTS

An icon on the display will signal when additional garments can be introduced into the washing machine, without decreasing the washing performance. To add garments, first stop the washing machine by pressing

the START/PAUSE button then open the door and insert them.
Press the START/PAUSE button again to restart the wash cycle from the point at which it was interrupted.

## CHANGING A RUNNING WASH CYCLE

To change a wash cycle while it is in progress, pause the washing machine using the START/PAUSE button, then select the desired cycle and press the START/PAUSE button again.
! To cancel a cycle that has already begun, press and hold the ON/OFF button. The cycle will be stopped and the machine will switch off.

## AT THE END OF THE WASH CYCLE

This will be indicated by the word **"END"** on the display; when the symbol switches off, the door may be opened. Open the door, unload the laundry and switch off the machine. If you do not press "ON/OFF" button, the washing machine will switch off automatically after about a 10 minutes.

## OPTIONS

- If the selected option is not compatible with the set wash cycle, the indicator light will flash accompanied by a buzzer and the option will not be activated.
- If the selected option is not compatible with another previously selected option, the indicator light will flash accompanied by a buzzer and the option will not be activated.

**Steam Hygiene**
This option enhances washing performance by generating steam during the wash cycle to remove any bacteria from the fibres, which are treated at the same time. Place the laundry in the drum, choose a compatible programme and select option Steam Hygiene.
! The steam generated during the operation of the washing machine may cause the porthole door to become hazy.

**Extra Rinse**
Selecting this option allows for enhancing rinsing efficiency and fully removing the detergent. It is particularly useful for sensitive skin.

**Final Care**
The washing machine will perform gentle tumbling through slow rotations of the drum. Final Care option starts after the cycle ends for a maximum duration of 6h and you can interrupt at any time by pressing any button on control panel or turning the knob.

**Rapid**
Selecting this option allows for reducing the wash cycle duration depending on the selected cycle, thus guaranteeing both water and energy saving. Use this cycle for lightly soiled garments.

**Start Delay**
To set a delayed start for the selected cycle, press the corresponding button repeatedly until the desired delay period is reached. When this option has been activated, the symbol lights up on the display. To remove the delayed start setting, press the button until "OFF" appears on the display.

**Temperature**
Each wash cycle has a pre-defined temperature. To modify the temperature, press the "**Temp.**" button. The value will appear on the display.

**Spin**
Each wash cycle has a pre-defined spin speed. To modify the spin speed, press the **"Spin Speed"** button. The value will appear on the display.

## DESCALE AND CLEAN PROCEDURE

An icon on the display will regularly (roughly every 50 cycles) remind users that is time to run a maintenance cycle to clean the washing machine and combat limescale build-up and bad odours.
To delete the descale alert turn the knob or push any button (including ON/OFF button).
For optimal maintenance we suggest using WPRO Limescale and grease remover, according to the instructions shown on the package.
The product can be purchased by contacting the technical assistance service or through the website www.whirlpool.eu.
Whirlpool declines all liability for any damages to the appliance caused by the use of other cleaning products for washing machines available on the market.

## TIPS AND SUGGESTIONS

**Divide the laundry according to:**
Type of fabric (cotton, mixed fibres, synthetics, wool, garments to be hand-washed). Colour (separate coloured garments from whites, wash new coloured garments separately). Delicates (small garments – such as nylon stockings – and items with hooks – such as bras: insert them in a fabric bag).

**Empty the pockets:**
Objects such as coins or lighters can damage the washing machine and the drum. Check all buttons.

**Follow the dosage recommendation / additives**
It optimizes the cleaning result, it avoids irritating residues of surplus detergent in your laundry and it saves money by avoiding waste of surplus detergent

**Use low temperature and longer duration**
The most efficient programmes in terms of energy consumption are generally those that perform at lower temperatures and longer duration.

**Observe the load sizes**
Load your washing machine up to the capacity indicated in the "PROGRAMME CHART" table to save water and energy.

**Noise and remaining moisture content**
They are influenced by the spinning speed: the higher the spinning speed in the spinning phase, the higher the noise and the lower the remaining moisture content.

## CARE AND MAINTENANCE

*For any cleaning and maintenance, switch off and unplug the washing machine. Do not use flammable fluids to clean the washing machine. Clean and maintain your washing machine periodically (at least 4 times per year).*

**Cutting off the water and electricity supplies**
Close the water tap after every wash. This will limit wear on the hydraulic system inside the washing machine and help to prevent leaks.
Unplug the washing machine when cleaning it and during all maintenance work.

**Cleaning the washing machine**
The outer parts and rubber components of the appliance can be cleaned using a soft cloth soaked in lukewarm soapy water. Do not use solvents or abrasives.

**Cleaning the detergent dispenser drawer**
Remove the dispenser drawer by lifting and pulling it outwards. Wash it under running water; this procedure should be effected regularly.

**Caring for the door and drum**
Always leave the porthole door ajar in order to prevent unpleasant odours from forming.

**Cleaning the pump**
The washing machine is fitted with a self-cleaning pump that does not require any maintenance. Small items (such as coins or buttons) may sometimes fall into the protective pre-chamber situated at the base of the pump.
! Make sure that the wash cycle has ended and unplug the appliance.
To access the pre-chamber:
1. remove the covering panel on the front side of the machine by inserting a screwdriver in the centre and sides of the panel and using it as a lever;
2. place a low and wide container under the water filter in order to collect the residual water.
3. loosen the drainage pump cover by turning it anti-clockwise: it is normal for some water to leak out;
4. clean the inside thoroughly;
5. screw the cover back on;
6. put the panel back in place, making sure the hooks slot in place before pushing the panel onto the appliance.

**Checking the water inlet hose**
Check the water inlet hose at least once a year. If it is cracked or broken, it must be replaced: during wash cycles, the high pressure of the water could suddenly split the hose open.
! Never use hoses that have already been used.

## ANTIMICROBIAL SEAL

The seal around the porthole door is made from a special mixture ensuring antimicrobial protection, thus reducing bacterial proliferation up to 99.99%.
The seal contains zinc pyrithione, a biocidal substance which reduces the proliferation of harmful microbes (*) such as batteries and mould prone to causing stains, unpleasant odours and product deterioration.
**(*) According to tests performed by the University of Perugia, Italy on**: Staphylococcus aureus, Escherichia coll, Pseudomonas aeruginosa, Candida albicans, Aspergillus niger, Penicillium digitatum
In rare cases an allergic reaction may be caused by prolonged contact between seal and skin.

## ACCESSORIES

*Contact our Technical Assistance Service to check whether the following accessories are available for this washing machine model.*

***Stacking kit***
With this accessory you can secure the tumble dryer to the upper part of your washing machine to save space and facilitate loading and unloading of the tumble dryer.

## TRANSPORT AND HANDLING

*Do not lift the washing machine by gripping it from the upper section.*
Unplug the appliance and close the water tap. Check that the door and detergent dispenser drawer are tightly closed. Detach the filling hose from the water tap then detach the drain hose. Empty all the water remaining in the hoses and secure the latter so that they do not get damaged during transport. Apply the transport bolts back on. Repeat, in reverse order, the transport bolt removal procedure described in the "Installation instructions".

## TROUBLESHOOTING

Your washing machine could occasionally fail to work. Before contacting the Technical Assistance Service, make sure that the problem cannot be easily solved using the following list.

| Anomalies | Possible causes / Solution |
|---|---|
| **The washing machine does not start.** | The appliance is not plugged into the socket fully, or not enough to make contact. |
| | There is no power in the house. |
| **The wash cycle does not start.** | The washing machine door is not closed properly. |
| | The ON/OFF ⏻ button has not been pressed. |
| | The START/PAUSE ▷II button has not been pressed. |
| | The water tap has not been opened. |
| | A delay has been set for the start time. |
| | The Demo Mode is active (see below how to deactivate). |
| **The washing machine does not fill with water ("🚿" appears on the display).** | The water inlet hose is not connected to the tap. |
| | The hose is bent. |
| | The water tap has not been opened. |
| | There is no water supply in the house. |
| | The pressure is too low. |
| | The START/PAUSE ▷II button has not been pressed. |
| **The washing machine continuously loads and unloads water.** | The drain hose is not fitted between 65 and 100 cm from the floor. |
| | The free end of the hose is immersed in water. |
| | The wall drainage system is not fitted with a breather pipe.<br><br>If the problem persists even after these checks, turn off the water tap, switch the appliance off and contact the Technical Assistance Service. If the home is on one of the upper floors of a building, there may be problems relating to back-siphonage, causing the washing machine to fill with water and drain continuously. Special anti-siphon valves are available in shops and help to prevent this inconvenience. |
| **The washing machines does not drain and the symbol ▦ (F9E1) on the display.** | Clean the pump filter (see Care and maintenance chapter) |
| | The drain hose is bent. |
| | The drainage duct is clogged. |
| **The washing machine vibrates a lot during the spin cycle.** | Transport bolts have been not removed correctly during installation. |
| | The washing machine is not leveled. |
| | The washing machine is tucked between furniture cabinets and the wall. |
| **The washing machine leaks.** | The water inlet hose is not screwed on properly. |
| | The detergent dispenser drawer is obstructed. |
| | The drain hose is not properly attached. |
| **The 🔧 symbol blinks and the display visualises an error code (e.g.: F1E1, F4...).** | Switch off the machine and unplug it, wait for approximately 1 minute and then switch it back on again.<br>If the problem persists, contact the Technical Assistance Service. |
| **There is too much foam.** | The detergent is not suitable for machine washing (it should display the text "for washing machines" or "hand and machine wash", or the like). |
| | Too much detergent was used. |
| **"Spin&Drain" phase icon blinks, "0" spin speed displayed .** | Unbalance of laundry load prevented spin cycle, to protect the washing machine.<br>If you want to spin the wet laundry, add more laundry items of different sizes and start "Spin&Drain" programme.<br>Avoid small laundry loads consisting of few big, absorbent pieces of laundry / wash different sizes of articles in one load. |

*Disable the DEMO MODE : The following actions must be carried out in sequence, without breaks. Switch the machine ON and then switch it OFF again. Press the START/PAUSE ▷II button until the buzzer is heard. Switch the machine on again. The "DEMO" indicator flashes and then turns OFF.*

**You can download the SAFETY AND INSTALLATION INSTRUCTIONS, OPERATING MANUAL, TECHNICAL SHEET and ENERGY DATA by:**

- Visiting the website **http://docs.hotpoint.eu.**
- Using the QR code.
- Alternatively, **contact our Technical Assistance Service** (the telephone number is indicated in the warranty booklet). When contacting the Technical Assistance Service, provide the codes shown on the adhesive label applied to the inside of the door.




For User's Repair & Maintenance Information visit www.hotpoint.eu.
The model information can be retrieved using the QR-Code reported in the energy label. The label also includes the model identifier that can be used to consult the portal of the registry at https://eprel.ec.europa.eu