THANK YOU FOR PURCHASING A HOTPOINT PRODUCT.

To receive more comprehensive assistance, register the appliance on
www.hotpoint.eu/register

Before using the appliance carefully read the Health and Safety guide.

Before using the machine, it is imperative that the transport bolts are removed. For more detailed instructions on how to remove them, see the Installation Guide.

CONTROL PANEL

1. REMOTE CONTROL button
2. UP / DOWN buttons
3. ON/OFF button
4. ACTIVE CARE button and indicator light
5. START/PAUSE button
6. CONFIRM / KEY LOCK button
7. START DELAY button
8. SPIN button
9. TEMPERATURE button
10. OPTIONS / SETTINGS button
11. STEAM HYGIENE/FAVOURITES button
12. WASH CYCLE SELECTOR KNOB

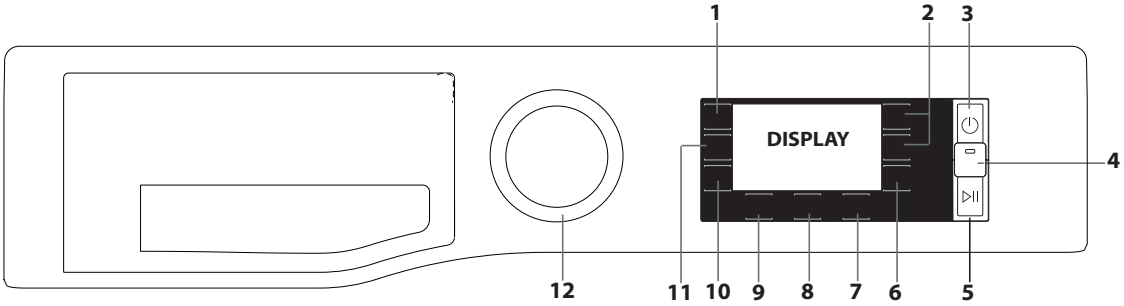

WASH CYCLE TABLE

Maximum load 10 kg Power input in off mode 0.5 W / in left-on mode 8 W																	
Wash cycle		Temperature		Max. spin speed (rpm)	Max. load (kg)	Duration (h : m)	ACTIVE care	Add Gar-ments	Detergents and Additives			Recommended detergent		Residual dampness % (***)	Energy consumption kWh	Total water l	Laundry temperature °C
		Setting	Range						Prewash 1	Wash 2	Fabric softener 3	Powder	Liquid				
Eco 40-60	**Eco 40-60 (1)**	40 °C	40°C	1351	10,0	3:59	–	●	–	●	○	✔	✔	53	0,88	60	30
				1351	5,0	3:00	–	●	–	●	○	✔	✔	53	0,63	60	32
				1351	2,5	2:35	–	●	–	●	○	✔	✔	53	0,38	43	21
	Cotton (2)	40°C	❄ - 60°C	1400	10,0	3:55	–	●	–	●	○	✔	✔	49	1,14	107	45
	Synthetics (3)	40°C	❄ - 60°C	1200	5,5	2:55	–	●	●	●	○	✔	✔	35	0,83	80	43
	Mixed	40°C	❄ - 40°C	1400	10,0	**	●	●	●	●	○	–	✔	–	–	–	–
	Delicates	40°C	❄ - 40°C	1000	5,5	**	●	●	–	●	○	–	✔	–	–	–	–
	Anti Stain 40°	40°C	❄ - 40°C	1000	5,5	**	●	●	–	●	○	✔	–	–	–	–	–
	Rapid 30 min	30°C	❄ - 30°C	800	5,5	0:30	●	●	–	●	○	–	✔	71	0,21	50	27
Specials																	
	• **White**	40°C	❄ - 90°C	1400	10,0	2:05	●	●	●	●	○	✔	✔	54	0,90	100	42
	• **Bed & Bath**	60°C	❄ - 60°C	1400	10,0	**	●	●	–	●	○	✔	✔	–	–	–	–
	• **Shirts**	40°C	❄ - 40°C	600	3,5	**	–	●	–	●	○	–	✔	–	–	–	–
	• **Business**	30°C	❄ - 30°C	400	2,0	**	–	●	–	●	○	–	✔	–	–	–	–
	• **Baby**	40°C	❄ - 40°C	800	4,0	**	–	●	–	●	○	–	✔	–	–	–	–
	• **Duvet**	30°C	❄ - 30°C	1000	3,5	**	–	●	–	●	○	–	✔	–	–	–	–
	• **Silk & Curtains**	30°C	❄ - 30°C	–	1,0	**	–	●	–	●	○	–	✔	–	–	–	–
	• **Jeans**	40°C	❄ - 40°C	800	4,0	**	–	●	–	●	○	–	✔	–	–	–	–
	• **Rapid 15 min**	30°C	❄ - 30°C	800	4,5	**	–	●	–	●	○	–	✔	–	–	–	–
	• **Cuddly toys**	30°C	❄ - 30°C	–	1,0	**	–	●	–	●	–	–	✔	–	–	–	–
	Spin & Drain *	–	–	1400	10,0	**	–	–	–	–	–	–	–	–	–	–	–
	Rinse & Spin	–	–	1400	10,0	**	–	–	–	–	○	–	–	–	–	–	–
	Steam Refresh	–	–	–	2,0	**	–	–	–	–	–	–	–	–	–	–	–
20°C	**20°C**	20 °C	❄ - 20 °C	1400	10,0	1:50	–	●	–	●	○	–	✔	55	0,20	95	22
	Wool	40°C	❄ - 40°C	800	2,5	**	–	●	–	●	○	–	✔	–	–	–	–
	Anti Allergy	60°C	40°C - 60°C	1400	5,5	**	–	●	–	●	○	✔	✔	–	–	–	–

☆ **Favourites:** allows for any wash cycle to be stored.

● Required dosage ○ Optional dosage

! Turning the knob to position allows for accessing the menu from which to set additional washing programmes.

The cycle duration indicated on the display or instruction manual is an estimate based on standard conditions. The actual duration may vary in relation to several factors, such as the temperature and pressure of the incoming water, ambient temperature, amount of detergent, load quantity and type, load balancing and any additional options selected.The values given for programmes other than the Eco 40-60 programme are indicative only.

1) Eco 40-60 **Eco 40-60** - Test wash cycle in compliance with EU Ecodesign regulation 2019/2014. The most efficient programme in terms of energy and water consumption for washing normally soiled cotton laundry.
Note: spin speed values shown on the display can slightly differs from the values stated in the table.

For all testing institutes:
2) Long cotton cycle: set wash cycle with a temperature of 40°C.
3) Long synthetics cycle: set wash cycle with a temperature of 40°C.

* By selecting the cycle and excluding the spin cycle, the washing machine will drain only.

** The duration of the wash cycles can be checked on the display.

*** After programme end and spinning with maximum selectable spin speed, in default programme setting.

PRODUCT DESCRIPTION

1. Top
2. Detergent dispenser drawer
3. Control panel
4. Handle
5. Porthole door
6. Drain pump (behind the plinth)
7. Plinth (removable)
8. Adjustable feet (2)

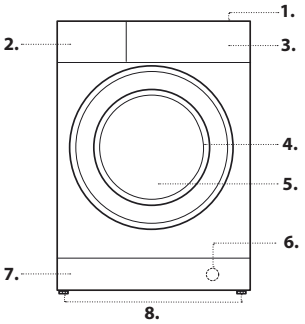

DETERGENT DISPENSER DRAWER

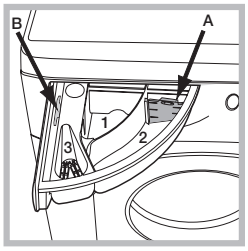

compartment 1: Pre-wash detergent (powder)
compartment 2: Detergent for the wash cycle (powder or liquid)
If liquid detergent is used, it is recommended that the removable plastic partition A (supplied) be used for proper dosage.
If powder detergent is used, place the partition into slot B.
compartment 3: Additives (fabric softeners, etc.)
The fabric softener should not overflow the grid.
! Use powder detergent for white cotton garments, for pre-washing, and for washing at temperatures over 60°C.
! Follow the instructions given on the detergent packaging.

WASH CYCLES

Follow the instructions on the symbols of the garment's wash care label. The value indicated in the symbol is the maximum recommended temperature for washing the garment.

Eco 40-60
For washing normally soiled cotton garments declared to be washable at 40 °C or 60 °C, together in the same cycle. This is the standard cotton programme and the most efficient in terms of water and energy consumption.

Cotton
Normally to heavily soiled and robust cottons .

Synthetics
Suitable for washing moderately soiled garments made of synthetic fibres (e.g. polyester, polyacrylic, viscose, etc.) or mixed synthetic-cotton fibres.

Mixed
For washing lightly to normally soiled resilient garments in cotton, linen, synthetic fibres and mixed fibres.

Delicates
For washing very delicate garments. It is advisable to turn the garments inside out before washing them. For best results, use liquid detergent on delicate garments.

Anti Stain 40°
The programme is suitable to heavily-soiled garments with resistant colours. It ensures a washing class that is higher than the standard class (A class). When running the programme, do not mix garments of different colours. We recommend the use of powder detergent. Pre-treatment with special additives is recommended if there are obstinate stains.

Rapid 30 min
For washing lightly soiled garments quickly. This cycle lasts only 30 minutes, saving time and energy.

Specials

- **White**
  For washing normally to heavily soiled towels, underwear, table and bed linen, etc in resilient cotton and linen.
- **Bed & Bath**
  For washing home linen in a single cycle. It optimises the use of fabric softener and allows for saving time and electricity. We recommend the use of powder detergent.
- **Shirts**
  Use the special wash cycle to wash shirts in different fabrics and colours to guarantee they receive the best possible care.
- **Business**
  Program for clothes used infrequently or only slightly dirty (do not use for dry clean garment).
  Follow the instructions of the garment's wash care label.
- **Baby**
  Use the special wash cycle to remove the remove the soiling typically caused by babies, while removing all traces of detergent from nappies in order to prevent the delicate skin of babies from suffering allergic reactions. The cycle has been designed to reduce the amount of bacteria by using a greater quantity of water and optimising the effect of special disinfecting additives added to the detergent.
- **Duvet**
  Designed for washing eiderdown padded items such as double or single duvets, cushions and anoraks. It is recommended to load such padded items in the drum with the edges folded inwards and not to exceed ¾ of the drum's volume. For optimal washing, we recommend using a liquid detergent.
- **Silk & Curtains**
  use special wash cycle to wash all silk garments or curtains. We recommend the use of special detergent which has been designed to wash delicate clothes.
  For washing curtains, fold and place them in a pillow case or mesh bag.
- **Jeans**
  Turn garments inside-out before washing and use a liquid detergent.
- **Rapid 15 min**
  for washing lightly soiled garments in a short time. Not suitable for wool, silk and garments to be washed by hand.
- **Cuddly toys**
  With this program it is possible to remove dust more easily and wash better cuddle toys.

Spin & Drain
Spins the load then empties the water. For resilient garments. If you exclude the spin cycle, the machine will drain only

Rinse & Spin
Rinses and then spins. For resilient garments.

Steam Refresh
The garments will be damp once the cycle is completed, so we recommend hanging them to dry (2 kg, roughly 3 items). This programme refreshes garments by removing bad odours and relaxing the fibres. Insert dry items only (that are not dirty) and select programme "**Steam Refresh**". Garments will be a little damp at the end of the cycle and can be worn after a few minutes. The "**Steam Refresh**" programme makes ironing easier.
! Do not add softeners or detergents.
! Not recommended for wool or silk garments.

20°C
For washing lightly soiled cotton garments, at a temperature of 20 °C.

Wool - *Wool Care :*
O ciclo de lavagem de lã desta máquina foi aprovado pela The Woolmark Company para lavagem de roupa de lã desde que as peças sejam lavadas de acordo com as instruções que constam da etiqueta da peça e com as instruções fornecidas pelo fabricante desta máquina de lavar roupa. O símbolo Woolmark é uma marca de Certificação em muitos países. **(M**2222**)**

Anti Allergy
Suitable for removing major allergens such as pollen, mites and cat or dog hair.

DISPLAY

The display is useful when programming the washing machine and provides plenty of information.

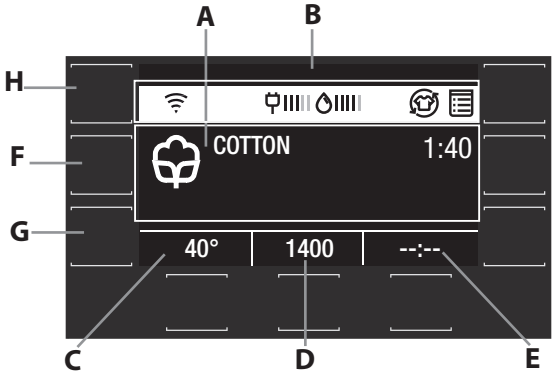

By pressing the △ and ▽ buttons, it is possible to select the desired option and confirm it with the ✓ button.
The first time the machine is switched on, you will be asked to select the language and the display will automatically display the language selection menu.
To select the desired language, press the △ and ▽ buttons; to confirm the selection, press the ✓ button.
Area **A** will display the following: the icon and selected washing programme, the washing phases and the time remaining to the end of the wash cycle.
Area **B** will display: the selected options, the energy and water consumption for the chosen cycle and the button lock symbol.
Area **C** will display the default temperature value on the basis of the set programme; if the programme does not include the setting of the temperature, the area will display the "**--** °" symbol.
Area **D** will display the default spin cycle speed on the basis of the set programme; if the programme does not include the setting of the spin cycle, the area will display the "**--**" symbol.
Area **E** will display the time remaining to the start of the selected programme if the DELAYED START function was set.

Pressing and holding button **F** for 3 seconds allows for memorising one or more preferred wash cycles.
To use the memorised cycles, turn the knob to position ☆.
Pressing button **G** allows for accessing the menu from which to set additional washing options.
Pressing and holding button **G** for 3 seconds allows for accessing the settings menu:
- Language: by pressing the △ and ▽ buttons, the user can select the desired language and confirm it with the ✓ button.
- Sound: by pressing the △ and ▽ buttons, the user can activate or deactivate the sound of the buttons and confirm it with the ✓ button.
- Display brightness: by pressing the △ and ▽ buttons, the user can select the type of display brightness and confirm it with the ✓ button.
- Restoring the factory settings: pressing and holding the ✓ button for 5 seconds restores the factory settings.
! During a wash cycle if the user does not interact with the display for 5 minutes, the SCREEN SAVER will activate. To return to the previous window, simply press any button.
Pressing button **H** allows for accessing the menu from which to set the washing machine remotely by external device.

Wifi Setup (not applicable in Russia)
To enable the appliance to be remotely controlled, you first have to complete successfully the connectivity set up process. This process is necessary to register your appliance and connect to your home network. The setup procedure has to be carried out only once. You have to carry it out again only if you change your router setup properties (network name and password).
Minimum requirements
Smart device: Android with a 1280x720 (or higher) screen or iOS.
See on App store the App compatibility with Android or iOS versions.
Wireless router: 2.4Ghz WiFi b/g/n.

RESET TO FACTORY DEFAULT OPERATION

For restoring the factory settings press and hold the button **G**, select the menu holding the botton for 3 seconds.
By pressing the △ and ▽ buttons, scroll down until **"FACTORY DEF."** and select it with the button ✓.
Press again the button ✓ for 5 seconds to confirm the reset to factory default settings.

Note: the appliance should then reset and ask again the language selection, select the desired language and confirm it with the ✓ button.

HOW TO SETUP

To use this feature you need to own: a smart phone or a tablet and a wireless router connected to internet. Please verify with your smart device that the signal strength of your home wireless network close to the appliance is good.
1. Download the Hotpoint Home Net app.
The first step to get your appliance connected is to download the app for your mobile device. The Hotpoint Home Net app will be your guide and walk you through all of the steps listed here. You can download the Hotpoint Home Net app by visiting either iTunes or Google Play and follow the instructions from app to create an account, connect and register your appliance.
The SAID code is used to sync a smart device with your appliance. MAC Address is displayed for the Wi-Fi module.

The pairing procedure has to carry out again only if you change your router set up properties (network name or password or data provider).
DISPLAY INDICATORS
Failure: Call Service
Refer to Troubleshooting section
Failure: Water filter clogged
Water cannot be drained; water filter might be blocked
Failure: No water
No or not sufficient inlet water.
In the event of any failure, refer to the "Troubleshooting" section.

Key Lock
To activate the control panel lock, press and hold the button for roughly 3 seconds. When the display visualises "KEY LOCK", the control panel is locked (except for the ON/OFF button ⏻). This will prevent accidental modifications to wash cycles, especially when children are at home. To deactivate the control panel lock, press and hold the button for approximately 3 seconds.
Locked door indicator
When lit, the symbol indicates that the door is locked. To prevent any damage, wait until the symbol turns off before opening the door.
To open the door while a cycle is in progress, press the START/PAUSE button ▷II; if the symbol is off, the door can be opened.

FIRST-TIME USE

Once the appliance has been installed, and before you use it for the first time, run a wash cycle with detergent and no laundry, using the wash cycle **White (60°)**.

DAILY USE

Prepare the laundry by following the suggestions appearing under the "TIPS AND SUGGESTIONS" section.
- Press the ON/OFF button ⏻; "HOTPOINT-ARISTON" will appear on the display.
- Open the door. Load the laundry while making sure not to exceed the maximum load quantity indicated in the wash cycle table.
- Pull out the detergent dispenser drawer and pour the detergent into the relevant compartments, as described in the "DETERGENT DISPENSER DRAWER" section.
- Close the door.
- The machine automatically selects the default temperature and spin speed set for the selected wash cycle.
- Select the desired wash cycle.
- Select the desired options.
STARTING CYCLE
Press the START/PAUSE ▷II button.
The machine will lock the door (symbol on) and the drum will start to rotate; the door will be unlocked (symbol OFF) and then locked again (symbol on) as preparation phase of each washing cycle. The "Clicking" noise is part of the door locking mechanism. Water will enter the drum and start the washing phase once the door is locked.

PAUSING A CYCLE

To pause the wash cycle, press the START/PAUSE ▷II button again. To start the wash cycle from the point at which it was interrupted, press the START/PAUSE ▷II button again.

OPENING THE DOOR, IF NECESSARY

Once a cycle starts, the symbol turns on to signal that the door cannot be opened. While a wash cycle is running, the door remains locked. To open the door while a cycle is under way, for example, to add or remove garments, press the START/PAUSE ▷II button to pause the cycle. If the symbol is not lit, the door may be opened. Press the START/PAUSE ▷II button again to continue the cycle.

ADDING GARMENTS

An icon on the display will signal when additional garments can be introduced into the washing machine, without decreasing the washing performance. To add garments, first stop the washing machine by pressing the START/PAUSE ▷II button then open the door and insert them.
Press the START/PAUSE ▷II button again to restart the wash cycle from the point at which it was interrupted.

CHANGING A RUNNING WASH CYCLE

To change a wash cycle while it is in progress, pause the washing machine using the START/PAUSE ▷II button, then select the desired cycle and press the START/PAUSE ▷II button again.
! To cancel a cycle that has already begun, press and hold the ON/OFF ⏻ button. The cycle will be stopped and the machine will switch off.

AT THE END OF THE WASH CYCLE

This will be indicated by the word "**CYCLE END**" on the display; when the symbol switches off, the door may be opened. Open the door, unload the laundry and switch off the machine. If you do not press ON/OFF ⏻ button, the washing machine will switch off automatically after about 10 minutes.

OPTIONS

- If the selected option is incompatible with the set wash cycle or with another previously selected option, in the menu the name of incompatible option is represented in grey color and the wording "**Not available**" will appear on the display, accompanied by a buzzer, the option will not be activated.

Steam Hygiene
This option enhances washing performance by generating steam during the wash cycle to remove any bacteria from the fibres, which are treated at the same time. Place the laundry in the drum, choose a compatible programme and select option Steam Hygiene.
! The steam generated during the operation of the washing machine may cause the porthole door to become hazy.

Start Delay
To set a delayed start for the selected cycle, press the corresponding button repeatedly until the desired delay period is reached. When this option has been activated, the selected values of delay start will appear on the display. To remove the delayed start setting, press the button until "--:--" appears on the display.

Active Care
The detergent, premixed with water, creates an unique emulsion able to better penetrate the fibers of the garments, cleaning stains at even low temperatures, preserving both colors and fabrics. These results are

obtained also due to the multiple different specific movements of the drum which best take care of the garments.
Powder and liquid detergents are recommended for this option.

Final Care

The washing machine will perform gentle tumbling through slow rotations of the drum. Final Care option starts after the cycle ends for a maximum duration of 6h and you can interrupt at any time by pressing any button on control panel or turning the knob.

Rapid / Green

After pushing the button for the 1st time, option Rapid is selected and the cycle duration will be reduced.
Otherwise after pushing for the 2nd time, option Green is selected allowing more energy saving.

Multi Rinse

By selecting this option, the efficiency of the rinse is increased and optimal detergent removal is guaranteed. It is particularly useful for sensitive skin.
Press the button once, two or three times to select an additional 1, 2 or 3 rinses after the standard cycle rinse and remove all traces of detergent.
Press the button again to go back to the "Normal rinse" rinse type.

Easy Iron

By selecting this function, the wash and the spin cycles will be modified in order to reduce the formation of creases.

Cold Wash

This option saves energy by not heating the water used to wash your laundry – an advantage both to the environment and to your energy bill. Instead, intensified wash action and water optimisation ensure great wash results in the same average time of a standard cycle.
For the best washing results we recommend the usage of a liquid detergent.

Prewash

Allows you to perform a prewash.

Temperature

Each wash cycle has a pre-defined temperature. To modify the temperature, press the " °C " button. The value will appear on the display.

Spin

Each wash cycle has a pre-defined spin speed. To modify the spin speed, press the " " button. The value will appear on the display.

DESCALE AND CLEAN PROCEDURE

i Reminder on the display will regularly (roughly every 50 cycles) remind users that is time to run a maintenance cycle to clean the washing machine and combat limescale build-up and bad odours.
To delete the descale alert turn the knob or push any button (including ON/OFF button).
For optimal maintenance we suggest using WPRO Limescale and grease remover, according to the instructions shown on the package.
The product can be purchased by contacting the technical assistance service or through the website www.whirlpool.eu.
Whirlpool declines all liability for any damages to the appliance caused by the use of other cleaning products for washing machines available on the market.

TIPS AND SUGGESTIONS

Divide the laundry according to:

Type of fabric (cotton, mixed fibres, synthetics, wool, garments to be hand-washed). Colour (separate coloured garments from whites, wash new coloured garments separately). Delicates (small garments – such as nylon stockings – and items with hooks – such as bras: insert them in a fabric bag).

Empty the pockets:

Objects such as coins or lighters can damage the washing machine and the drum. Check all buttons.

Follow the dosage recommendation / additives

It optimizes the cleaning result, it avoids irritating residues of surplus detergent in your laundry and it saves money by avoiding waste of surplus detergent

Use low temperature and longer duration

The most efficient programmes in terms of energy consumption are generally those that perform at lower temperatures and longer duration.

Observe the load sizes

Load your washing machine up to the capacity indicated in the "PROGRAMME CHART" table to save water and energy.

Noise and remaining moisture content

They are influenced by the spinning speed: the higher the spinning speed in the spinning phase, the higher the noise and the lower the remaining moisture content.

CARE AND MAINTENANCE

For any cleaning and maintenance, switch off and unplug the washing machine. Do not use flammable fluids to clean the washing machine.
Clean and maintain your washing machine periodically (at least 4 times per year).

Cutting off the water and electricity supplies

Close the water tap after every wash. This will limit wear on the hydraulic system inside the washing machine and help to prevent leaks.
Unplug the washing machine when cleaning it and during all maintenance work.

Cleaning the washing machine

The outer parts and rubber components of the appliance can be cleaned using a soft cloth soaked in lukewarm soapy water. Do not use solvents or abrasives.

Cleaning the detergent dispenser drawer

Remove the dispenser drawer by lifting and pulling it outwards. Wash it under running water; this procedure should be effected regularly.

Caring for the door and drum

Always leave the porthole door ajar in order to prevent unpleasant odours from forming.

Cleaning the pump

The washing machine is fitted with a self-cleaning pump that does not require any maintenance. Small items (such as coins or buttons) may sometimes fall into the protective pre-chamber situated at the base of the pump.
! Make sure that the wash cycle has ended and unplug the appliance.
To access the pre-chamber:
1. remove the covering panel on the front side of the machine by inserting a screwdriver in the centre and sides of the panel and using it as a lever;
2. place a low and wide container under the water filter in order to collect the residual water.
3. loosen the drainage pump cover by turning it anti-clockwise: it is normal for some water to leak out;
4. clean the inside thoroughly;
5. screw the cover back on;
6. put the panel back in place, making sure the hooks slot in place before pushing the panel onto the appliance.

Checking the water inlet hose

Check the water inlet hose at least once a year. If it is cracked or broken, it must be replaced: during wash cycles, the high pressure of the water could suddenly split the hose open.
! Never use hoses that have already been used.

ANTIMICROBIAL SEAL

The seal around the porthole door is made from a special mixture ensuring antimicrobial protection, thus reducing bacterial proliferation up to 99.99%.
The seal contains zinc pyrithione, a biocidal substance which reduces the proliferation of harmful microbes (*) such as batteries and mould prone to causing stains, unpleasant odours and product deterioration.
(*) According to tests performed by the University of Perugia, Italy on: Staphylococcus aureus, Escherichia coll, Pseudomonas aeruginosa, Candida albicans, Aspergillus niger, Penicillium digitatum
In rare cases an allergic reaction may be caused by prolonged contact between seal and skin.

ACCESSORIES

Contact our Technical Assistance Service to check whether the following accessories are available for this washing machine model.

Stacking kit

With this accessory you can secure the tumble dryer to the upper part of your washing machine to save space and facilitate loading and unloading of the tumble dryer.

TRANSPORT AND HANDLING

Do not lift the washing machine by gripping it from the upper section.
Unplug the appliance and close the water tap. Check that the door and detergent dispenser drawer are tightly closed. Detach the filling hose from the water tap then detach the drain hose. Empty all the water remaining in the hoses and secure the latter so that they do not get damaged during transport. Apply the transport bolts back on. Repeat, in reverse order, the transport bolt removal procedure described in the "Installation instructions".

TROUBLESHOOTING

Your washing machine could occasionally fail to work. Before contacting the Technical Assistance Service, make sure that the problem cannot be easily solved using the following list.

Anomalies	Possible causes / Solution
The washing machine does not start.	The appliance is not plugged into the socket fully, or not enough to make contact.
	There is no power in the house.
The wash cycle does not start.	The washing machine door is not closed properly.
	The ON/OFF button has not been pressed.
	The START/PAUSE button has not been pressed.
	The water tap has not been opened.
	A delay has been set for the start time.
	The Demo Mode is active (see below how to deactivate).
The washing machine does not fill with water ("" appears on the display).	The water inlet hose is not connected to the tap.
	The hose is bent.
	The water tap has not been opened.
	There is no water supply in the house.
	The pressure is too low.
	The START/PAUSE button has not been pressed.
The washing machine continuously loads and unloads water.	The drain hose is not fitted between 65 and 100 cm from the floor.
	The free end of the hose is immersed in water.
	The wall drainage system is not fitted with a breather pipe. If the problem persists even after these checks, turn off the water tap, switch the appliance off and contact the Technical Assistance Service. If the home is on one of the upper floors of a building, there may be problems relating to back-siphonage, causing the washing machine to fill with water and drain continuously. Special anti-siphon valves are available in shops and help to prevent this inconvenience.
The washing machines does not drain and the symbol (F9E1) on the display.	Clean the pump filter (see Care and maintenance chapter)
	The drain hose is bent.
	The drainage duct is clogged.
The washing machine vibrates a lot during the spin cycle.	Transport bolts have been not removed correctly during installation.
	The washing machine is not leveled.
	The washing machine is tucked between furniture cabinets and the wall.
The washing machine leaks.	The water inlet hose is not screwed on properly.
	The detergent dispenser drawer is obstructed.
	The drain hose is not properly attached.
The symbol appear and the display visualises an error code (e.g.: F1E1, F4...).	Switch off the machine and unplug it, wait for approximately 1 minute and then switch it back on again. If the problem persists, contact the Technical Assistance Service.
There is too much foam.	The detergent is not suitable for machine washing (it should display the text "for washing machines" or "hand and machine wash", or the like).
	Too much detergent was used.
" " phase icon blinks, "0" spin speed displayed .	Unbalance of laundry load prevented spin cycle, to protect the washing machine. If you want to spin the wet laundry, add more laundry items of different sizes and start "Spin&Drain" programme. Avoid small laundry loads consisting of few big, absorbent pieces of laundry / wash different sizes of articles in one load.
Not possible to connect .	Please verify with your smart device that the signal strength of your home wireless network close to the appliance is good.
	Check connection of router to Internet and eventually contact your Internet service provider.
	If router is connected to Internet follow app instructions for connect router to appliance.
	If Wi-Fi connection status icon is OFF and/or SAID code and MAC address are blank in the connectivity menu, restore to factory default in the settings menu. (See Reset to Factory default operation chapter)

Disable the DEMO MODE : The following actions must be carried out in sequence, without breaks. Switch the machine ON and then switch it OFF again. Press the START/PAUSE button until the buzzer is heard. Switch the machine on again. The "DEMO" indicator flashes and then turns OFF.

You can download the SAFETY AND INSTALLATION INSTRUCTIONS, TECHNICAL SHEET and ENERGY DATA by:

- Visiting the website **http://docs.hotpoint.eu.**
- Using the QR code.
- Alternatively, **contact our Technical Assistance Service** (the telephone number is indicated in the warranty booklet). When contacting the Technical Assistance Service, provide the codes shown on the adhesive label applied to the inside of the door.
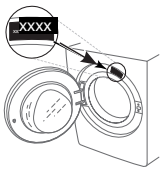
For User's Repair & Maintenance Information visit www.hotpoint.eu.
The model information can be retrieved using the QR-Code reported in the energy label. The label also includes the model identifier that can be used to consult the portal of the registry at https://eprel.ec.europa.eu